Instruction Book



IMPORTANT SAFETY INSTRUCTIONS

This appliance is not intended for use by persons (including children) with reduced physical, sensory or mental capabilities, or lack of experience and knowledge, unless they have been given supervision or instruction concerning use of the appliance by a person responsible for their safety.
Children should be supervised to ensure that they do not play with this sewing machine.

When using an electrical appliance, basic safety precautions should always be followed, including the following:

This sewing machine is designed and manufactured for household use only.

Read all instructions before using this sewing machine.

DANGER— To reduce the risk of electric shock:

1. An appliance should never be left unattended when plugged in. Always unplug this sewing machine from the electric outlet immediately after using and before cleaning.

WARNING— To reduce the risk of burns, fire, electric shock, or injury to persons:

1. Do not allow to be used as a toy. Close attention is necessary when this sewing machine is used by or near children.
2. Use this appliance only for its intended use as described in this owner's manual.
   Use only attachments recommended by the manufacturer as contained in this owner's manual.
3. Never operate this sewing machine if it has a damaged cord or plug, if it is not working properly, if it has been dropped or damaged, or dropped into water.
   Return this sewing machine to the nearest authorized dealer or service center for examination, repair, electrical or mechanical adjustment.
4. Never operate the appliance with any air opening blocked. Keep ventilation openings of this sewing machine and foot controller free from accumulation of lint, dust and loose cloth.
5. Never drop or insert any object into any opening.
6. Do not use outdoors.
7. Do not operate where aerosol (spray) products are being used or where oxygen is being administered.
8. To disconnect, turn all controls to the off ("O") position, then remove plug from outlet.
9. Do not unplug by pulling on cord. To unplug, grasp the plug, not the cord.
10. Keep fingers away from all moving parts. Special care is required around the sewing machine needle and/or cutting blade.
11. Always use the proper needle plate. The wrong plate can cause the needle to break.
12. Do not use bent needles.
13. Do not pull or push fabric while stitching. It may deflect the needle causing it to break.
14. Switch this sewing machine off ("O") when making any adjustment in the needle area, such as threading the needle, changing the needle, threading the bobbin or changing the presser foot, and the like.
15. Always unplug this sewing machine from the electrical outlet when removing covers, lubricating, or when making any other adjustments mentioned in this owner's manual.

SAVE THESE INSTRUCTIONS

The design and specifications are subject to change without a prior notice.



Please note that on disposal, this product must be safely recycled in accordance with relevant National legislation relating to electrical/electronic products. If in doubt please contact your retailer for guidance. (European Union only)

TABLE OF CONTENTS

GETTING READY TO SEW
Names of Parts ... 2
Standard Accessories ... 3
Extension Table ... 4
Accessories Storage ... 4
Connecting the Power Supply ... 5
Controlling Sewing Speed ... 6
  Speed control slider ... 6
  Foot control ... 6
Machine Operating Buttons ... 7
  Start/stop button ... 7
  Reverse button ... 7
  Auto-lock button ... 7
  Needle up/down position button ... 8
  Thread cutter button ... 8
  Jog dial ... 8
  Confirm button ... 8
Raising and Lowering the Presser Foot ... 9
Knee Lifter ... 9
Function Keys ... 10
Changing the Presser Foot ... 11
Removing and attaching the Foot Holder ... 11
Setting for Dual Feed Sewing ... 12
  Attaching the dual feed foot ... 12
  Setting the dual feed device ... 12
  Disengaging the dual feed device ... 13
  Removing the dual feed foot ... 13
Setting the Spool of Thread ... 14
  Extra spool pin ... 14
Removing the Bobbin ... 14
Winding the Bobbin ... 15
Inserting the Bobbin ... 16
Threading the Machine ... 17
  Built-in needle threader ... 18
Drawing up the Bobbin Thread ... 19
Changing Needles ... 20
Balancing Thread Tension ... 21
  Balanced thread tension ... 21
  Manual thread tension adjustment ... 21
Adjusting the Foot Pressure ... 22
Dropping the Feed Dog ... 22
Selecting Patterns ... 23
  Help key ... 24
Customizing Machine Settings ... 25
  Screen brightness ... 25
  Buzzer sound ... 25
  Sub window display time ... 26
  Resumption setting ... 26
  Favorite stitch adjustment ... 26
  Touch panel calibration ... 27
  Language selection ... 28
  Deleting stored pattern combinations ... 28
  Resetting all to default ... 28

UTILITY STITCHES
Straight Stitch ... 29
  Starting to sew ... 29
  Sewing from the edge of thick fabric ... 29
  Changing sewing direction ... 29
  Securing seams ... 30
Using the Seam Guides ... 30
  Turning a square corner ... 30
Assembling the Extra Wide Table ... 31
Using the Cloth Guide ... 31
  Adjusting the needle drop position ... 32
  Adjusting the stitch length ... 32
  Customizing preset values of stitch length and width ... 33
  Restoring the default settings ... 33
  Automatic plate converter ... 34
  Opening the automatic plate converter ... 35
  Variety of straight stitches ... 36
Sewing with the Dual Feed Device ... 38
Basting ... 39
Zigzag Stitch ... 40
  Adjusting the stitch width ... 40
  Adjusting the stitch length ... 40
Overcasting stitches ... 41
Zipper Sewing ... 43
Rolled Hem ... 46
Blind Hemming ... 47
Shell Tuck ... 49
Buttonholes ... 50
  Square (Sensor) buttonhole ... 51
  Corded buttonhole ... 54
  Adjusting the buttonhole width ... 55
  Adjusting the buttonhole stitch density ... 55
  Memory buttonhole ... 56
  Round end and fine fabric buttonholes ... 57
  Keyhole buttonholes ... 57
  Stretch buttonholes ... 58
Button Sewing ... 59
Darning ... 60
Tacking ... 62
Eyelet ... 63

PATCHWORK AND QUILTING
Patchwork Piecing ... 64
Patchwork Stitches ... 64
Quilting ... 65
Clasp Stitch ... 65
Free-motion Quilting ... 66

DECORATIVE STITCHES
Applique ... 67
Smocking ... 67
Fagoting ... 68
Scallop ... 68
Cording (3-strand cording) ... 69
Cording (1-strand cording) ... 69
Satin Stitches ... 70
Sewing Border Designs with the Border Guide Foot ... 70
Sewing a Mirror Images of a Pattern ... 71
Sewing a Single Unit of a Pattern ... 71
Twin Needle Sewing ... 72

PROGRAMMING A PATTERN COMBINATION
Pattern Combination ... 74
Pattern Combination with a Mirror Image ... 75
Programming Automatic Thread Cutting ... 76
Checking Properties of a Pattern Combination ... 76
Sewing the Pattern Combination from the Beginning ... 77
Sewing the Current Pattern from the Beginning ... 77
Bridge Stitches ... 78
Programming French Knots ... 79

MONOGRAMMING
Selecting a Letter Style ... 80
Selecting a Character ... 80
Programming a Monogram ... 81

EDITING A PTTERN COMBINATION
Viewing a Long Combination ... 82
Deleting Patterns or Characters ... 82
Inserting a Pattern ... 83
Duplicating a Pattern ... 83
Uniform Stitch Adjustment ... 84
  Unified needle drop position ... 84
Programming Satin Stitches and Stretch Stitches ... 85
Individual Stitch Adjustment ... 85

STORING AND RECALLING A PATTERN COMBINATION
Storing a Pattern Combination ... 86
Overwriting a Stored Combination ... 86
Recalling a Stored Combination ... 87
Deleting a Stored Combination ... 87

CARE AND MAINTENANCE
Correcting Distorted Stitch Patterns ... 88
Cleaning the Hook Race, Feed Dog and Thread Cutter Mechanism ... 89
Reattaching the Bobbin Holder and Needle Plate ... 89
Problems and Warning Signals ... 90
Troubleshooting ... 92

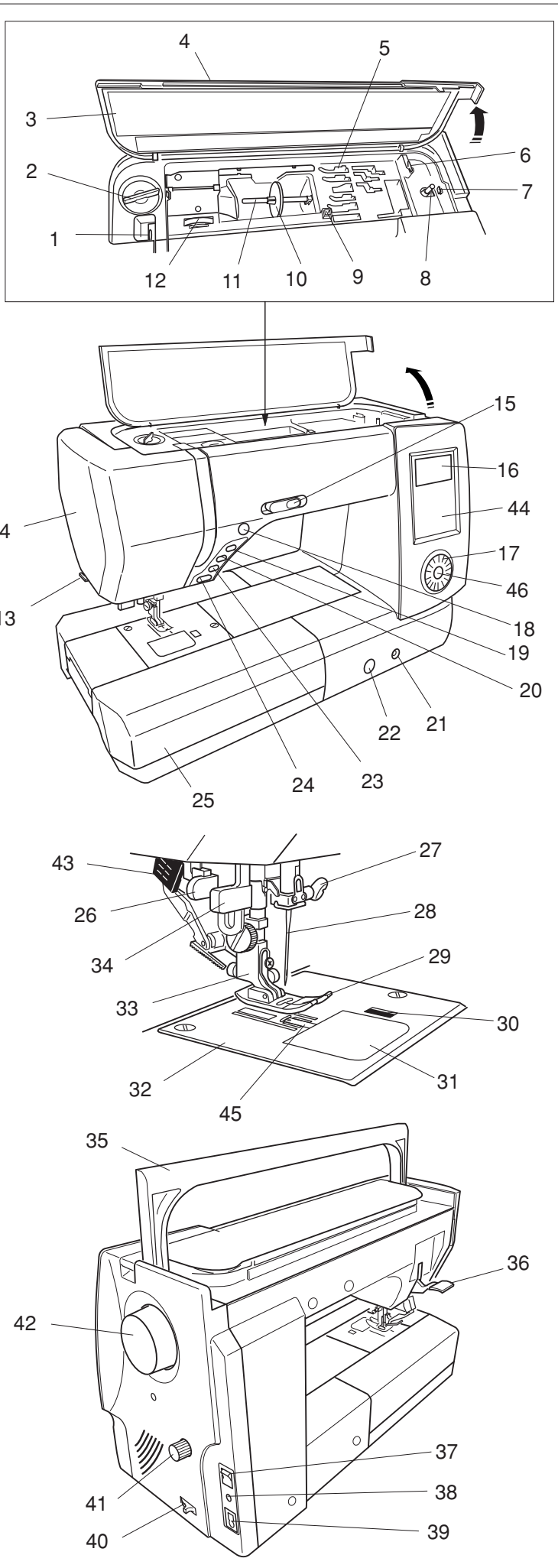

GETTING READY TO SEW

Names of Parts

1 Take-up lever
2 Foot pressure dial
3 Reference chart
4 Top cover
5 Foot storage compartment
6 Bobbin thread cutter
7 Bobbin winder stopper
8 Bobbin winder spindle
9 Hole for extra spool pin
10 Spool holder
11 Spool pin
12 Thread tension dial
13 Thread cutter
14 Face plate
15 Speed control slider
16 LCD screen
17 Jog dial
18 Thread cutter button
19 Needle up/down position button
20 Auto-lock button
21 Knee lifter socket
22 Feed balancing dial
23 Reverse button
24 Start/stop button
25 Extension table (accessory storage)
26 Buttonhole lever
27 Needle clamp screw
28 Needle
29 Zigzag foot A
30 Hook cover release button
31 Hook cover plate
32 Needle plate
33 Foot holder
34 Built-in needle threader
35 Carrying handle
36 Presser foot lifter
37 Power switch
38 Foot control jack
39 Machine socket
40 Drop feed lever
41 Dual feed balancing dial
42 Hand wheel
43 Dual feed device
44 Touch panel
45 Automatic plate converter
46 Confirm button

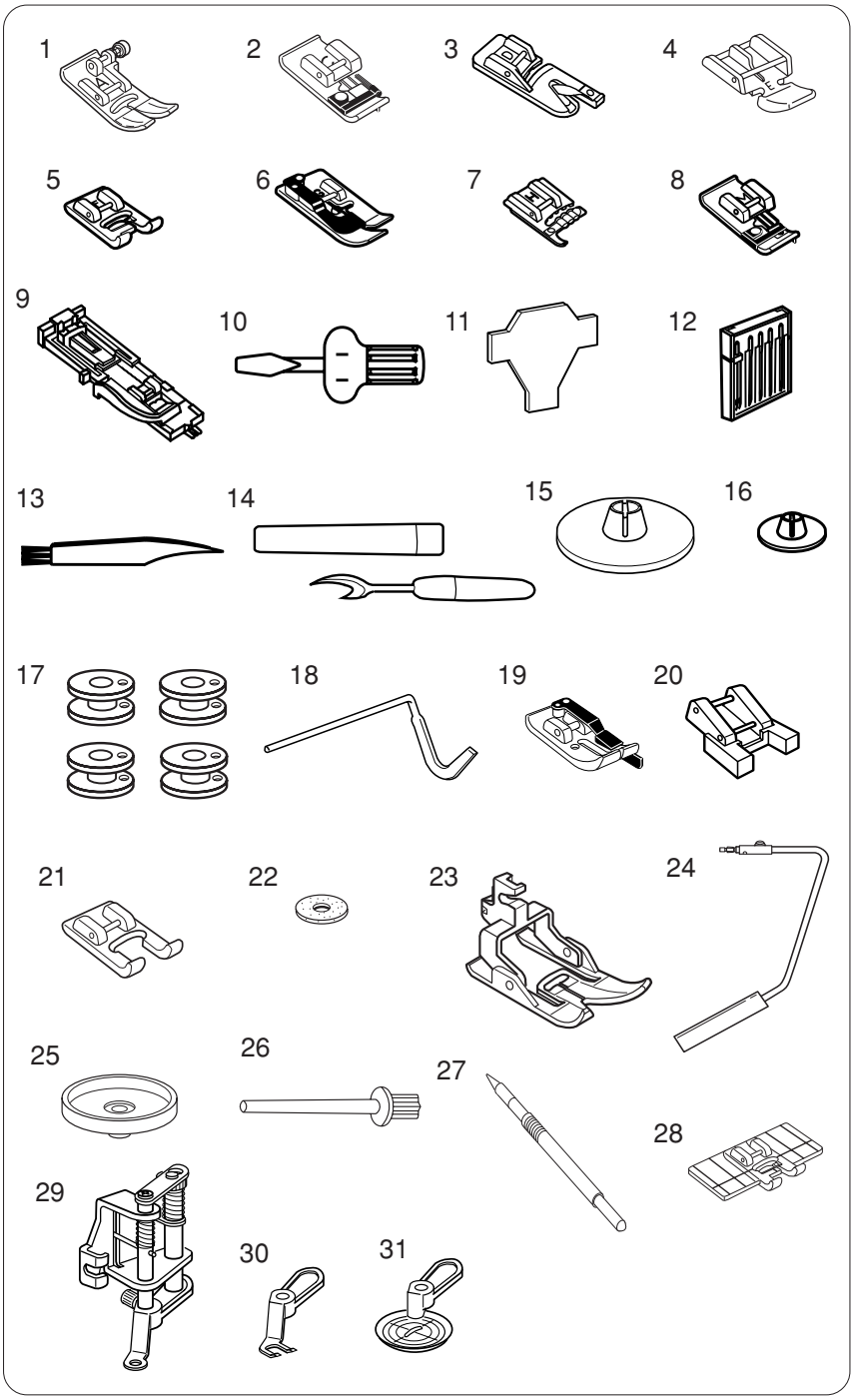

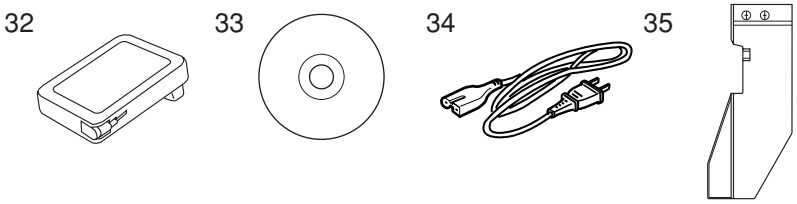

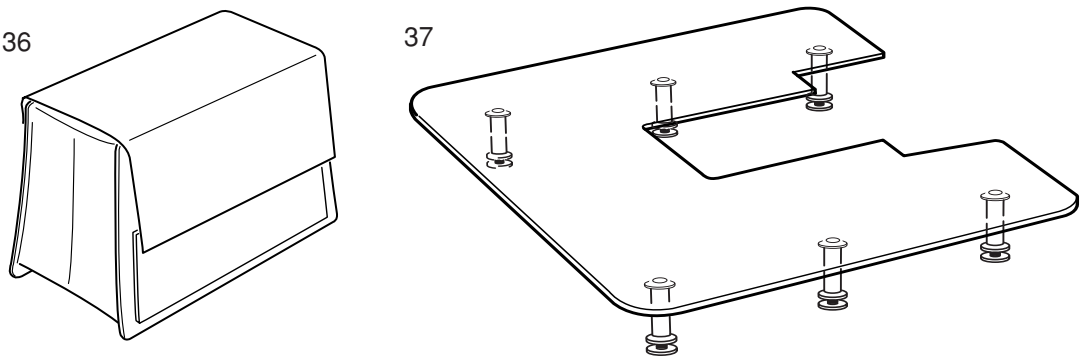

Standard Accessories

1 Zigzag foot A (set on the machine)
2 Overcasting foot C
3 Rolled hem foot D
4 Zipper foot E
5 Satin stitch foot F
6 Blind hemming foot G
7 Cording foot H
8 Overedge foot M
9 Automatic buttonhole foot R
10 Screwdriver
11 Screwdriver key
12 Set of needles
13 Lint brush
14 Seam ripper (Buttonhole opener)
15 Spool holder (large, set on the machine)
16 Spool holder (small)
17 Bobbins
18 Quilting guide bar
19 1/4” seam foot O
20 Button sewing foot T
21 Open toe satin stitch foot F2
22 Felt cushion
23 Dual feed foot AD
24 Knee lifter
25 Spool supporter
26 Extra spool pin
27 Touch panel stylus
28 Border guide foot
29 Convertible free motion quilting foot QB- H
30 Open-toe foot
31 Clear view foot
32 Foot control
33 Instructional video DVD
34 Power cable
35 Cloth guide
36 Semi-hard fabric cover
37 Extra wide table

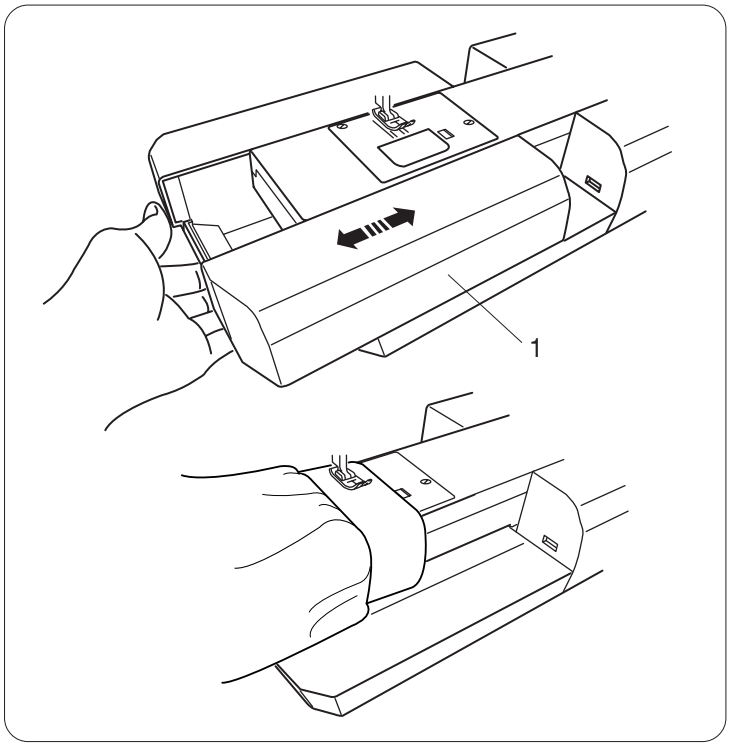

Extension Table

The extension table provides an extended sewing area and can be removed for free arm sewing.

1 Extension table

To detach:

Draw the table out to the left.

To attach:

Slide the table on the base and push the table to the right.

Free-arm sewing

Free-arm sewing is used for stitching sleeves, waistbands, pant legs or any other tubular garments.
It is also useful for darning socks or mending knees or elbows.

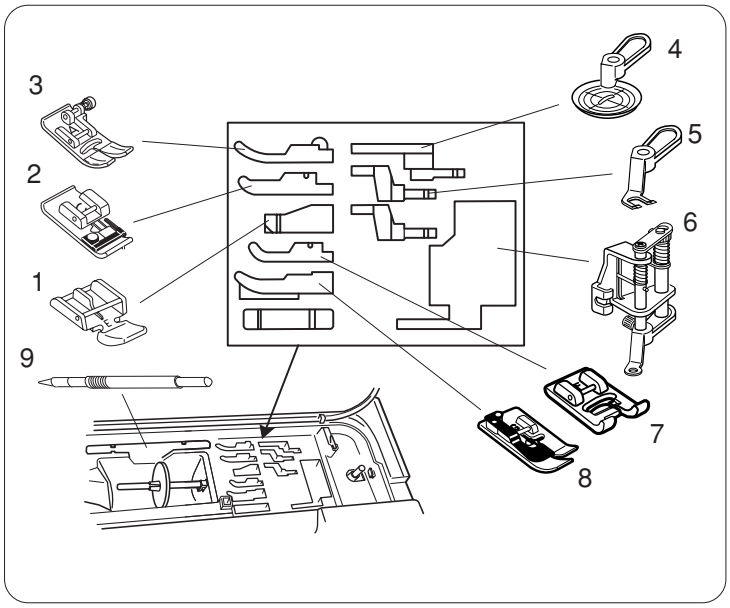

Accessories Storage

The accessories can be conveniently stored in the foot storage compartment under the top cover and in the extension table.

Under the top cover

1 Zipper foot E
2 Overcasting foot C
3 Zigzag foot A
4 Clear view foot
5 Open-toe foot
6 Convertible free motion quilting foot QB-H
7 Satin stitch foot F
8 Blind hemming foot G
9 Touch panel stylus

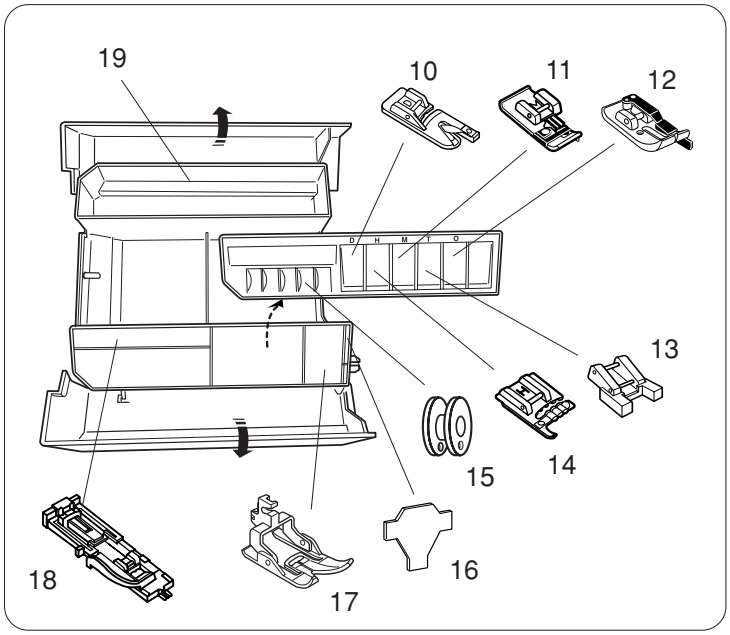

In the extension table

10 Rolled hem foot D
11 Overedge foot M
12 1/4” seam foot O
13 Button sewing foot T
14 Cording foot H
15 Bobbins
16 Screwdriver key
17 Dual feed foot AD
18 Automatic buttonhole foot R
19 Rear compartment

NOTE:
Other accessories can be stored in the rear compartment.

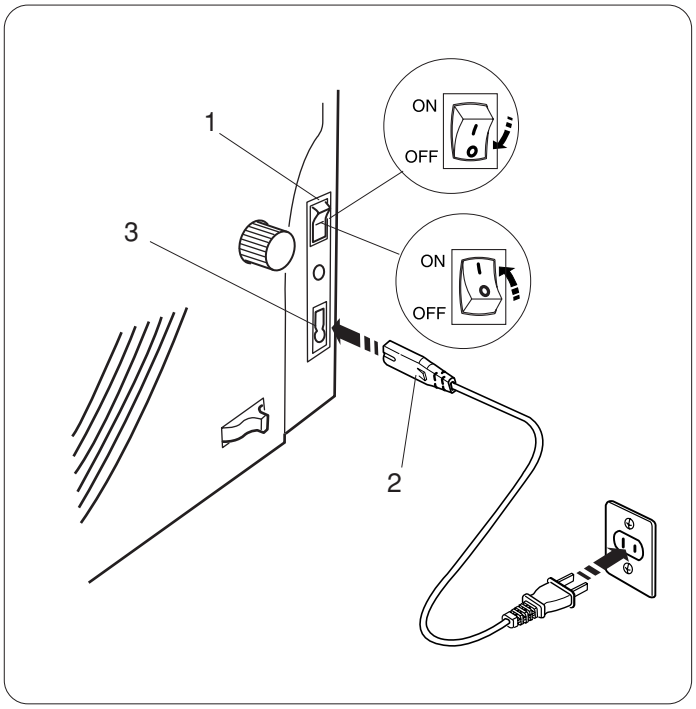

Connecting the Power Supply

First make sure the power switch is off.
Insert the machine plug of the power supply cord into the machine socket.
Insert the power supply plug into the wall outlet, and turn the power switch on.

1 Power switch
2 Machine plug
3 Machine socket

NOTES:
Make sure to use the power supply cord that came with the machine.
If you turn off the power switch, wait for 5 seconds before turning it on again.

WARNING:
While in operation, always keep your eyes on the sewing area, and do not touch any moving parts such as the thread take-up lever, handwheel or needle.
Always turn off the power switch and unplug the machine from the power supply:
- when leaving the machine unattended.
- when attaching or removing parts.
- when cleaning the machine.

Do not place anything on the foot control.

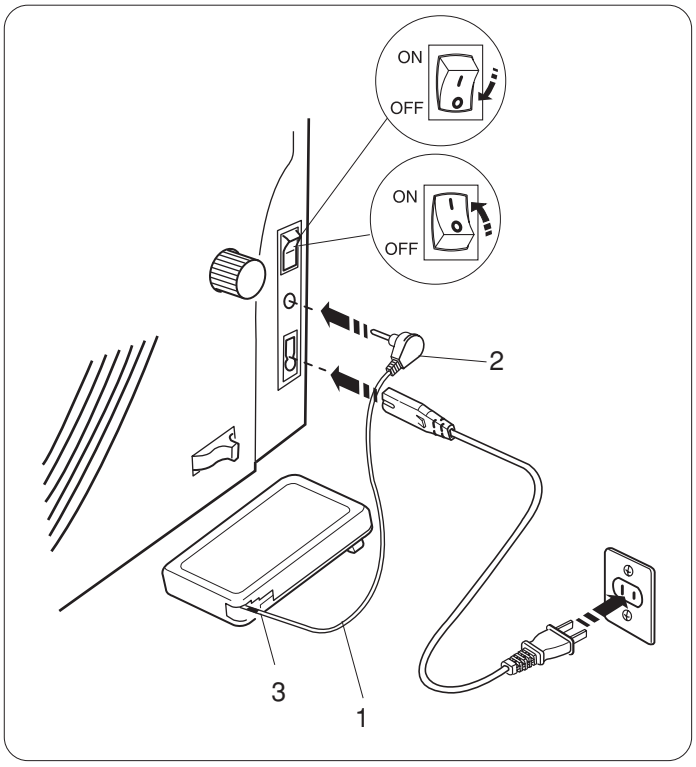

If you wish to use the foot control, pull out the cord from the foot control and insert the pin connector into the jack on the machine.

1 Foot control cord
2 Pin connector

Insert the machine plug of the power supply cord into the machine socket.
Insert the power supply plug into the wall outlet, and turn the power switch on.

CAUTION:
Do not pull the foot control cord beyond the red mark.

3 Red mark

Operating Instructions:
The symbol “O” on a switch indicates the “off” position of the switch.

For the U.S.A. and Canada only
Polarized plug (one blade wider than the other):
To reduce the risk of electric shock, this plug is intended to fit in a polarized outlet only one way. If it does not fit fully in the outlet, reverse the plug. If it still does not fit, contact a qualified electrician to install the proper outlet. Do not modify the plug in any way.

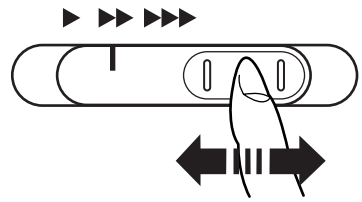

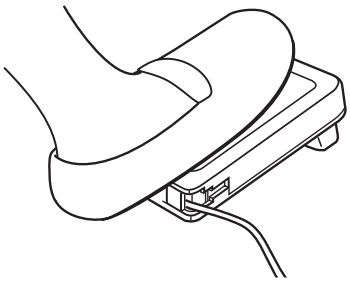

Controlling Sewing Speed

Speed control slider

You can limit the maximum sewing speed with the speed control slider according to your sewing needs.
To increase the sewing speed, move the slider to the right.
To decrease the sewing speed, move the slider to the left.

Foot control

Pressing on the foot control can vary sewing speed. The harder you press the foot control, the faster the machine runs.

NOTE:
The machine runs at the maximum speed set by the speed control slider when the foot control is fully depressed.

Operating Instructions:

Foot control model 21371 is for use with this sewing machine.

NOTE:
This machine is equipped with an automatic shutdown safety feature to prevent overheating whenever the machine is running overloaded. Follow the safety instructions that appear on the LCD screen.

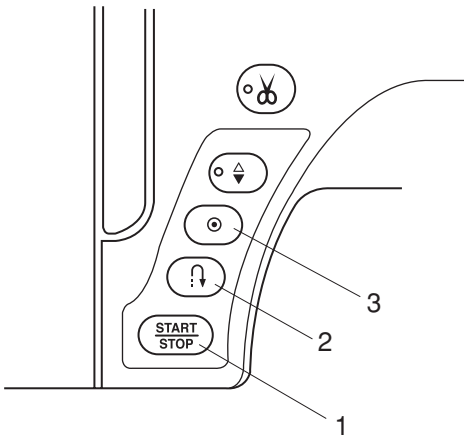

(A)

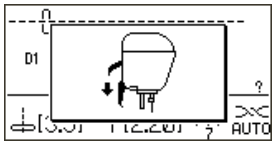

(B)

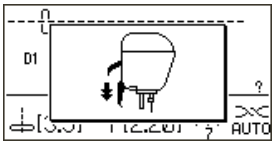

Machine Operating Buttons

1 Start/stop button

Press this button to start or stop the machine.
The machine starts running slowly for the first few stitches, it then runs at the speed set by the speed control slider. The machine runs slowly as long as this button is pressed.
The button will turn red when the machine is running, and green when it has been stopped.

Pressing and holding this button while sewing will slow down the sewing speed and the machine will stop when the button is released.

NOTE:
The start/stop button cannot be used when the foot control is connected to the machine.
The machine will not start if the presser foot is up and the LCD screen shows message **(A)** or **(B)**.
Lower the presser foot and start the machine.

2 Reverse button

When sewing pattern number D1S, D1, D4, 9-11, 93 or 151-154 the machine will sew in reverse as long as the reverse button is pressed.

If you press the reverse button when sewing any other patterns, the machine will immediately sew locking stitches and automatically stop.

When the foot control is not connected and pattern D1S, D1, D4, 9-11, 93 or 151-154 is selected, the machine will sew in reverse at the slowest speed as long as the reverse button is pressed.

3 Auto-lock button

When sewing pattern number D1S, D1, D4, 9-11, 93 or 151-156, the machine will immediately sew locking stitches and automatically stop when the auto-lock button is pressed.
When sewing all other patterns, the machine will sew to the end of the current pattern, sew locking stitches and stop automatically.

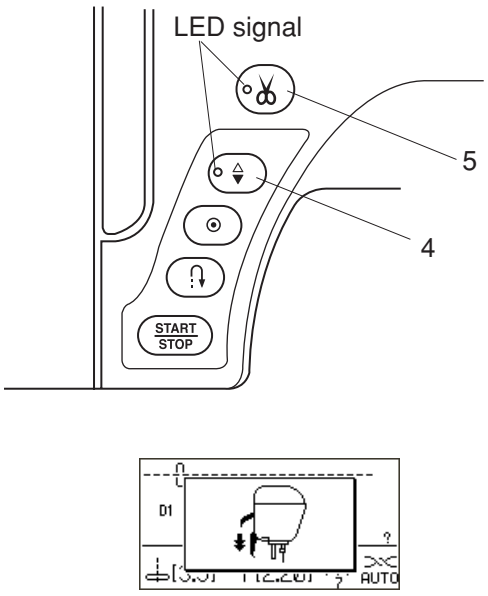

4 Needle up/down position button

Press this button to bring the needle bar up or down. The machine will stop with the needle up or down depending on the position set by this button.

The LED signal is turned on when the down position is selected.

NOTE:
The machine will always stop with the needle up after sewing buttonholes, darning and monograms.
If you press the up/down needle position button when the presser foot is at the extra lifted position, the LCD screen will advise you to lower the foot.

5 Thread cutter button

Press this button after finishing sewing and the machine will trim the threads automatically.
The LED signal blinks while cutting threads.

NOTES:
Use the thread cutter on the face plate when cutting specialized threads or threads #30 or thicker.
Clean the auto thread cutter mechanism regularly to avoid malfunction due to built up lint.
Avoid using a paper-cored spools with the auto thread cutter. When nearly empty, they may not unwind smoothly and cause the thread to bunch up or slip when using the auto thread cutter (refer to page 10).
Do not pull the fabric if auto thread cutting fails and the thread tangles. Turn the power switch off and remove the needle plate to remove the tangled threads (refer to page 89).

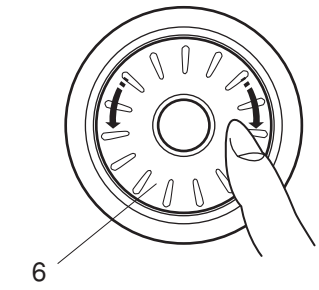

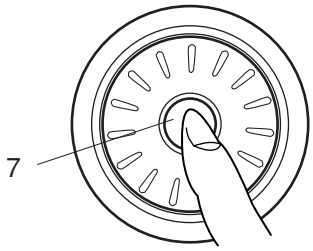

6 Jog dial

The jog dial is used for selecting stitch patterns, characters and certain settings.

Turn the jog dial clockwise or counterclockwise with your fingertip to browse patterns or settings.

7 Confirm button

Press the confirm button to select the desired pattern or settings.

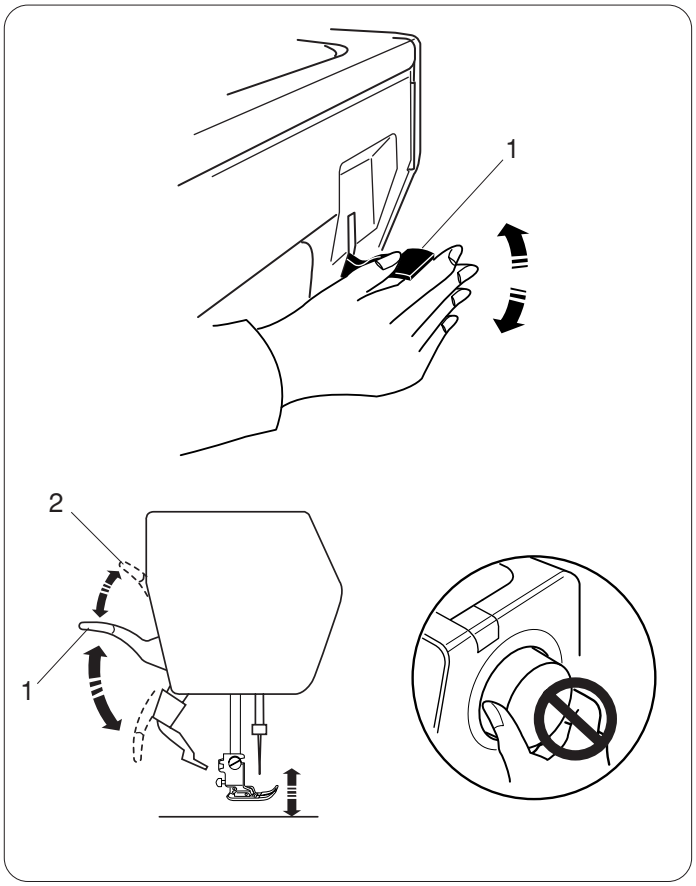

Raising and Lowering the Presser Foot

The presser foot lifter raises and lowers the presser foot.

1 Presser foot lifter

You can raise the presser foot higher than the normal up position. This allows for setting the dual feed device, attaching presser foot, and also helps you to place thick layers of fabrics under the foot.

2 Extra lifted position

NOTE:
Do not turn the hand wheel of press the up/down needle position button when the presser foot is in the extra lifted position.

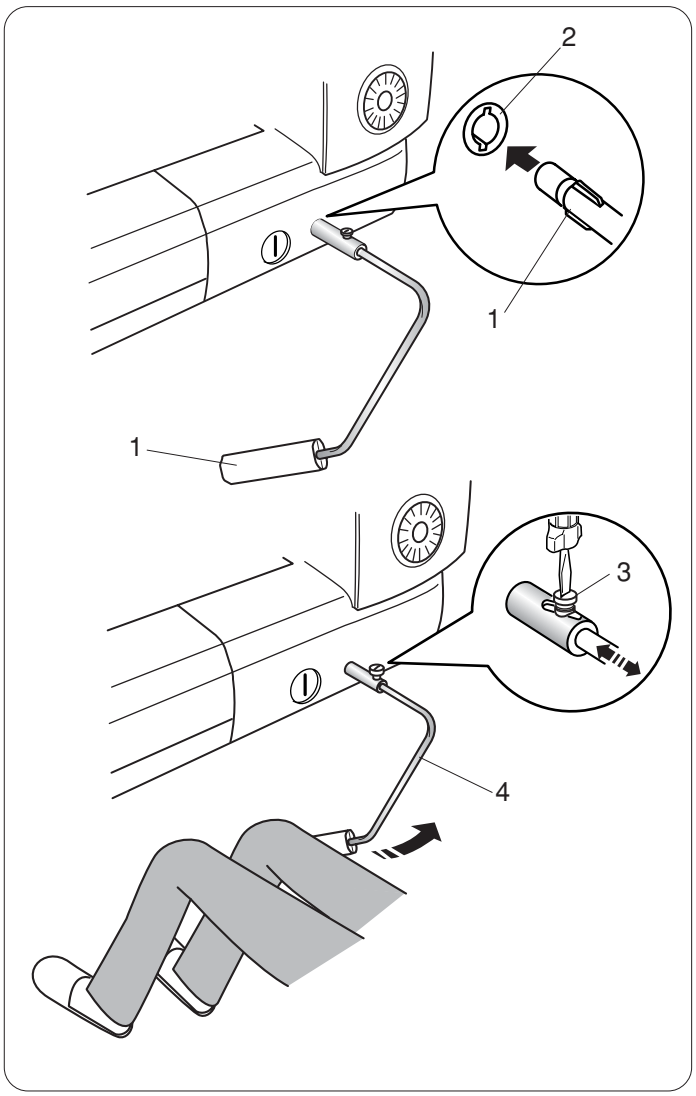

Knee Lifter

The knee lifter is extremely helpful when sewing patchwork, quilting etc, since it allows you to handle the fabric while your knee controls the presser foot.

Attaching the knee lifter

Match the ribs on the knee lifter with the notches in the knee lifter socket and insert the knee lifter.

1 Knee lifter
2 Knee lifter socket

Adjusting the knee lifter

The angle of the knee lifter can be adjusted to fit you.
Loosen the setscrew and slide the angle bar in or out to adjust the angle of the knee lifter.
Tighten the setscrew to secure the angle bar.

3 Setscrew
4 Angle bar

Using the knee lifter

Push the knee lifter with your knee to easily move the presser foot up and down.
You can control how high the foot rises by the amount of knee pressure you exert.

NOTE:
Do not touch the knee lifter while stitching, otherwise the fabric will not be fed smoothly.

Function Keys

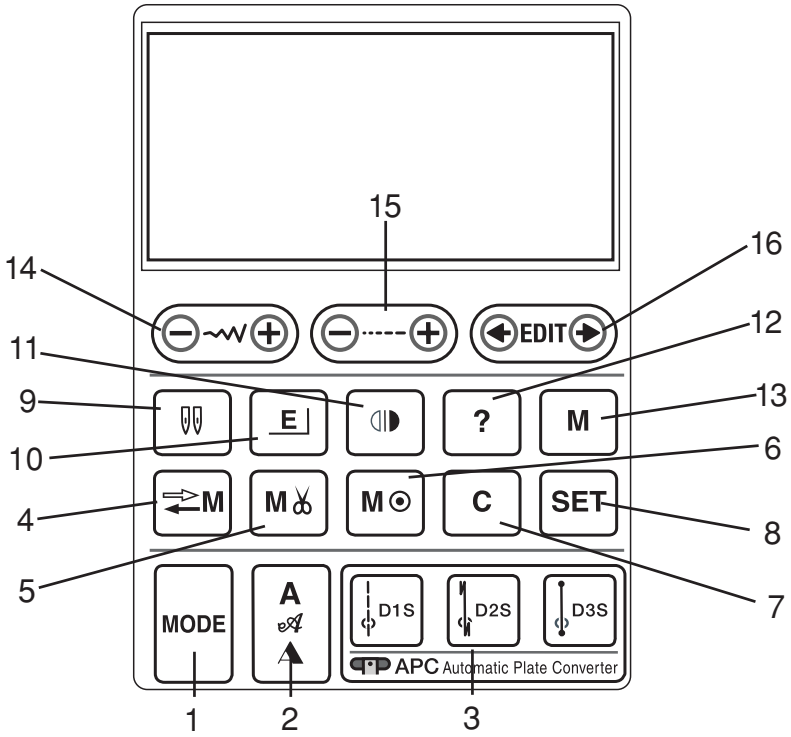

1 Mode key (refer to page 23)
Press this key to open the group selection window.

2 Monogram key (refer to page 80)
Press this key to select one of 3 letter styles available.

3 Direct pattern selection keys (refer to page 34)
Press one of 3 keys to select a straight stitch pattern using automatic plate converter.

4 Memory recall key (refer to page 86)
Press this button to register or recall programmed pattern combinations.
This button is also used to customize the default settings of stitch length and width.

5 Auto thread cutter key (refer to page 76)
Press this key before sewing, if you wish to cut the threads automatically after finishing sewing with a locking stitch.
When programming a pattern combination, press this key after the last programmed pattern to cut the threads automatically after finishing sewing.
The LED signal on the thread cutter button (refer to page 8) will turn on when the auto thread cutter key is pressed.

6 Locking stitch key (refer to page 71)
Press this key after the last memorized pattern.
The machine will automatically lock the stitch off and then stop when finishing sewing.

7 Clear key (refer to page 82)
Press this key to delete the last memorized pattern.
Press and hold this key until the buzzer sounds to delete the whole pattern combination.

8 Set key (refer to page 25)
Press this key to open the machine setting window for customizing the machine settings.

9 Twin needle key (refer to page 72)
Press this key when sewing with a twin needle.

10 Elongation key (refer to page 70)
Press this key to elongate satin stitch patterns.

11 Mirror image key (refer to pages 71, 75)
Press this key to sew a mirror image of the selected pattern.

12 Help key (refer to page 24)
Press this key to view information on the selected pattern.

13 Memory key (refer to pages 71, 75)
Press this key to memorize the selected pattern.
Up to 50 patterns can be memorized.

14 Stitch width adjusting key (refer to pages 32, 40, 55)
Press this key to alter the stitch width.

15 Stitch length adjusting key (refer to pages 32, 40, 55)
Press this key to alter the stitch length.

16 Edit key (refer to page 82)
Press this key to edit the programmed pattern combinations.

Changing the Presser Foot

⚠ WARNING:
Turn the power switch off before changing the presser foot.

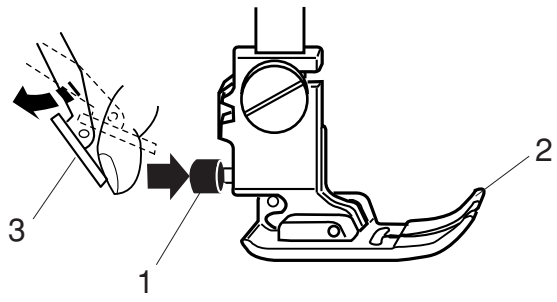

Removing the presser foot
Raise the needle to its highest position and raise the presser foot lifter.
Press the red button on the back of the foot holder.
The presser foot will drop off.

1 Red button
2 Presser foot

NOTE:
If the dual feed device interferes when pressing the red button, shift the dual feed device away.

3 Dual feed device

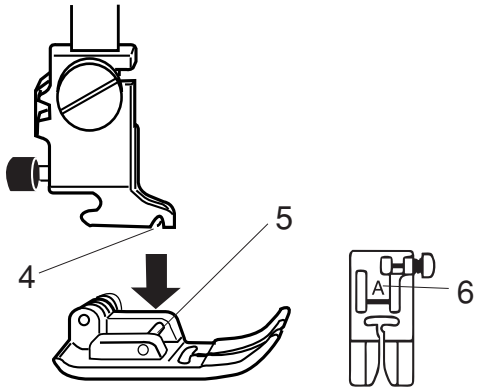

Attaching the presser foot
Place the presser foot so that the pin on the foot lies just under the groove of the foot holder.
Lower the presser bar to lock the foot in place.
Each foot is marked with an identification letter.

4 Groove
5 Presser foot
6 Identification letter

Removing and Attaching the Foot Holder

⚠ WARNING:
Turn the power switch off before removing or attaching the foot holder.

Remove the needle for easy operation.

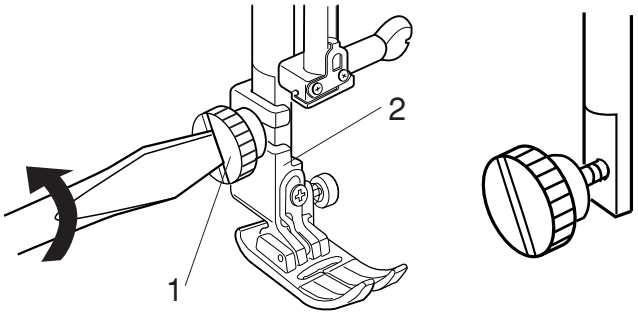

Removing the foot holder
Raise the presser foot and loosen the thumbscrew.
Remove the foot holder.

1 Thumbscrew
2 Foot holder

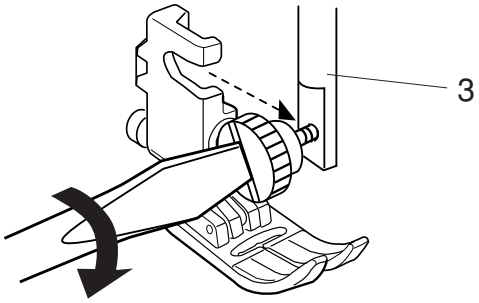

Attaching the foot holder
Attach the foot holder to the presser bar from the rear.
Tighten the thumbscrew securely with the screwdriver.

3 Presser bar

Attach the needle after installation of the foot holder.

NOTE:
Lower the presser foot when loosening and tightening the thumbscrew if it is hard to access.

Setting for Dual Feed Sewing

⚠ WARNING:
Turn the power switch off before changing the presser foot.

Attach the dual feed foot when sewing with the dual feed device.

Attaching the dual feed foot

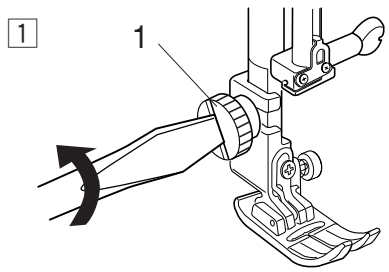

1 Remove the needle and loosen the thumbscrew with the screwdriver.
   1 Thumbscrew

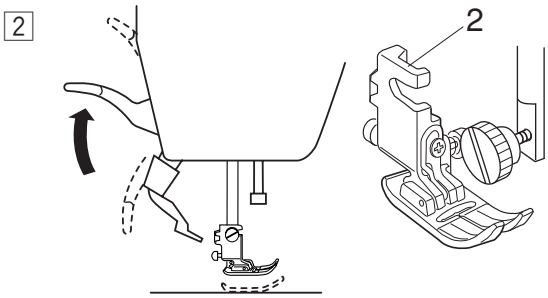

2 Raise the presser foot and loosen the thumbscrew to remove the foot holder .
   2 Foot holder

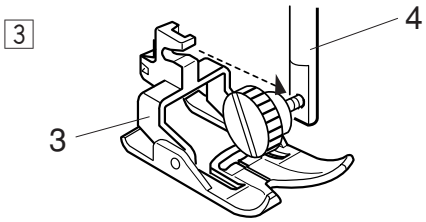

3 Attach the dual feed foot to the presser bar and tighten the thumbscrew lightly. Lower the presser foot and tighten the thumbscrew securely with the screwdriver.
   3 Dual feed foot
   4 Presser bar

Setting the dual feed device

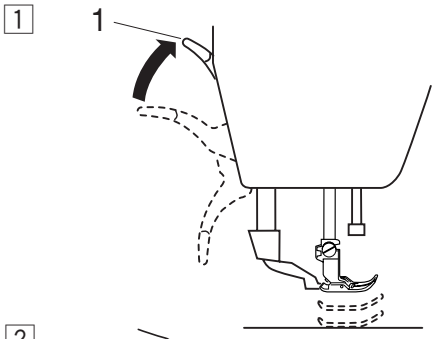

1 Raise the presser foot lifter to the extra lifted position.
   1 Extra lifted position

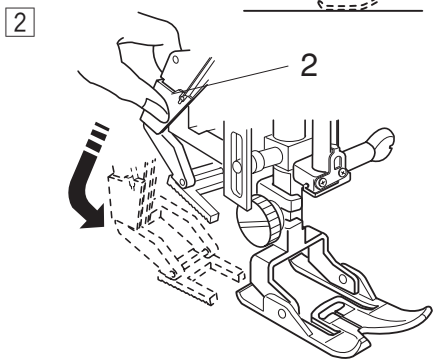

2 Hold the dual feed device and lower it slowly.
   2 Dual feed device

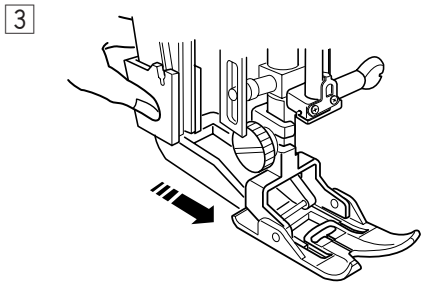

3 Swing the dual feed device forward to the underside of the dual feed foot until they engage.

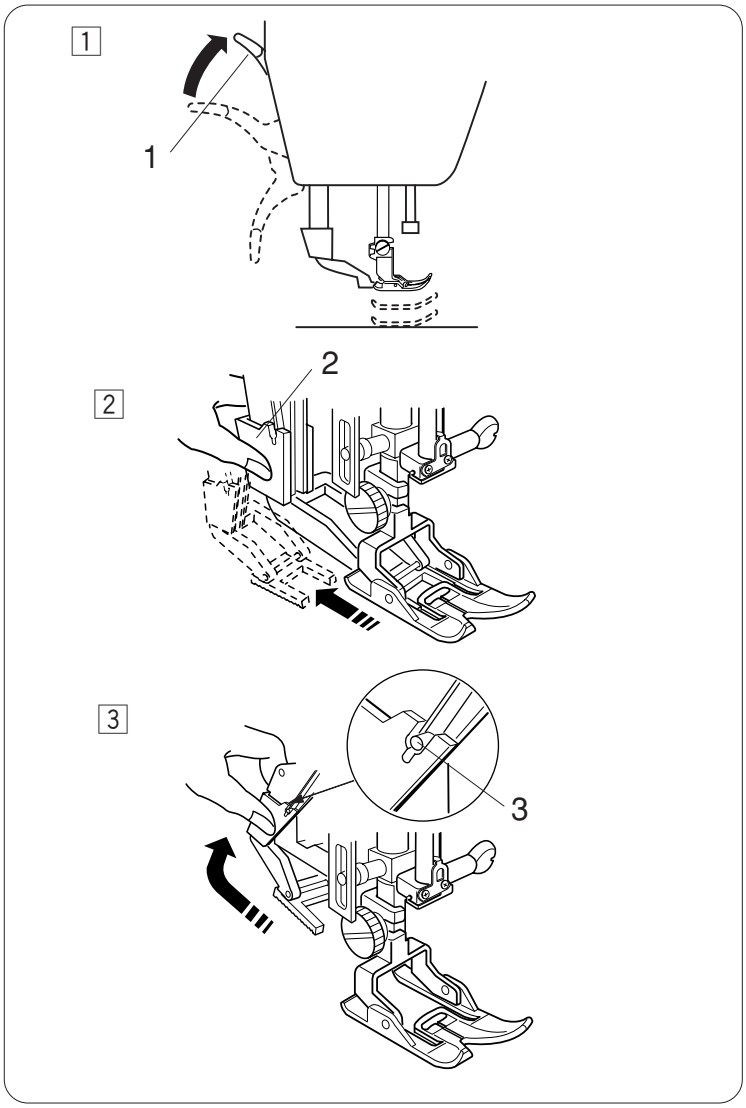

Disengaging the dual feed device

1 Raise the presser foot lifter to the extra lifted position.
1 Extra lifted position

2 Pull down the dual feed device to disengage it from the dual feed foot. Swing the dual feed device to the rear.
2 Dual feed device

3 Swing up the dual feed device until it catches the pins.
3 Pin

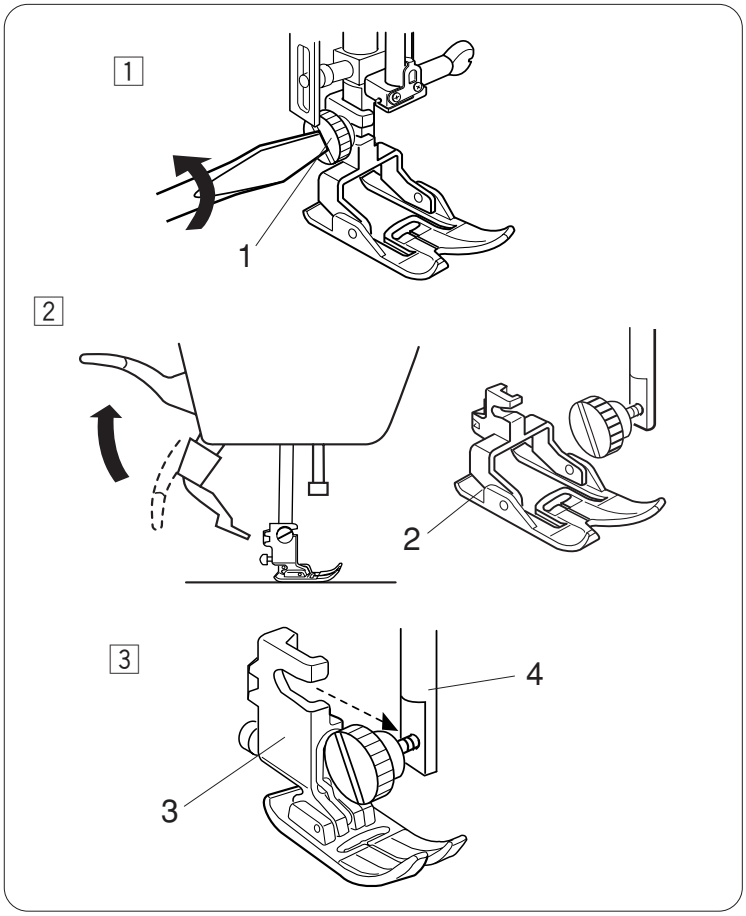

Removing the dual feed foot

1 Loosen the thumbscrew with the screwdriver.
1 Thumbscrew

2 Raise the presser foot and loosen the thumbscrew to remove the dual feed foot.
2 Dual feed foot

3 Attach the foot holder to the presser bar and tighten the thumbscrew lightly. Lower the presser foot and tighten the thumbscrew securely with the screwdriver.
3 Foot holder
4 Presser bar

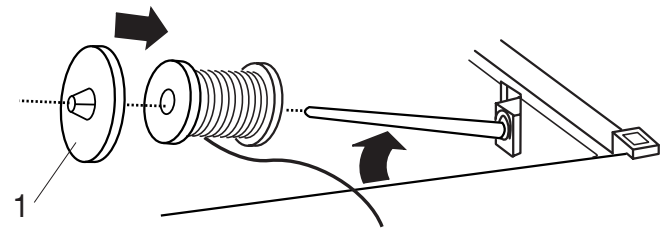

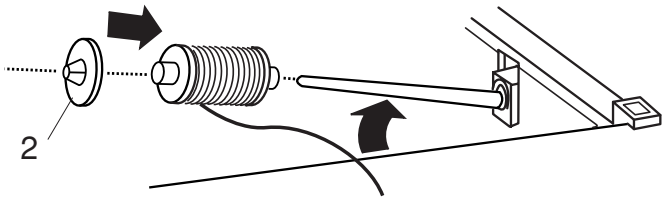

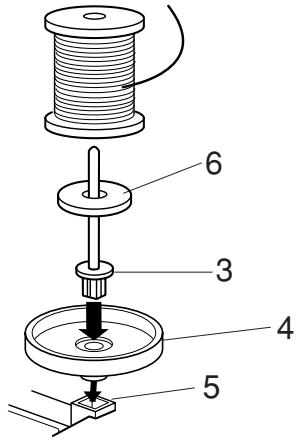

Setting the Spool of Thread

Lift up the spool pin. Place the spool of thread on the spool pin with the thread coming off the spool as shown. Attach the large spool holder, and press it firmly against the spool of thread.

1 Large spool holder

NOTE:
Use the small spool holder to hold narrow or small spools of thread.

2 Small spool holder

Extra spool pin

Use the extra spool pin when you need to wind a bobbin without unthreading the machine while working on a sewing project.
Insert the extra spool pin into the spool supporter and then into the hole beside the horizontal spool pin.
Place the felt cushion on the spool pin and place a spool of thread on it as shown.

3 Extra spool pin
4 Spool supporter
5 Hole for extra spool pin
6 Felt cushion

NOTE:
The extra spool pin is also used for twin needle sewing.

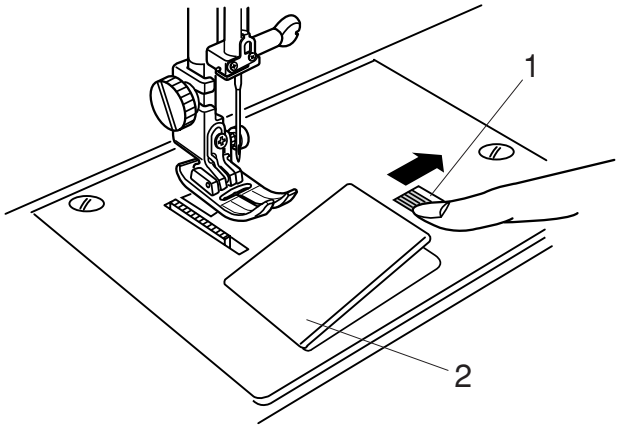

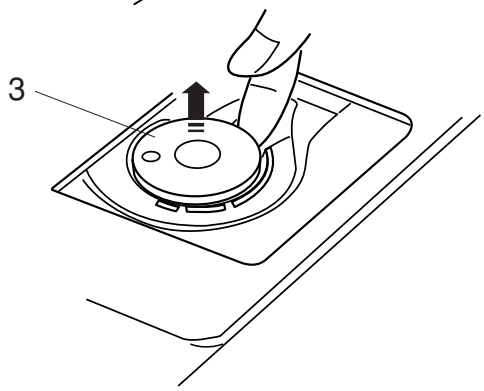

Removing the Bobbin

Slide the hook cover release button to the right, and remove the hook cover plate.

1 Hook cover release button
2 Hook cover plate

Lift out the bobbin from the bobbin holder.

3 Bobbin

NOTE:
Use the Janome plastic bobbins for horizontal hook (marked with "**J**"). Using other bobbins, such as pre-wound paper bobbins, may cause stitching problems and/ or damage to the bobbin holder.

Winding the Bobbin

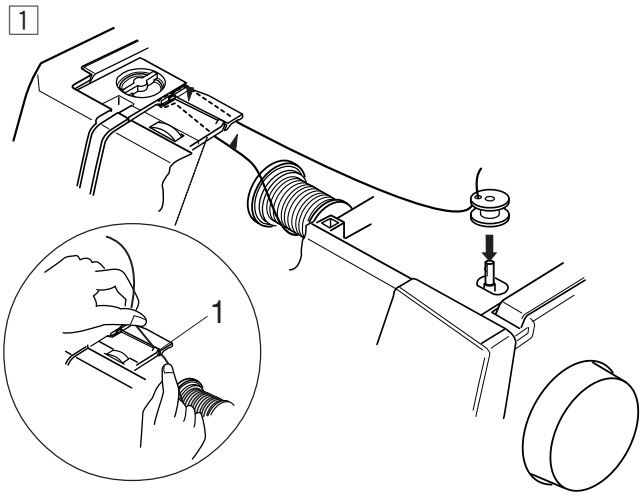

1 Pull the thread from the spool.
Hold the thread with both hands and pass the thread into the guide slot.
1 Guide slot

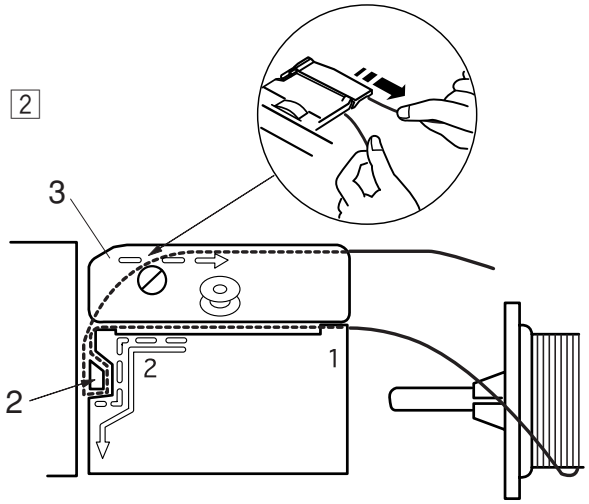

2 Draw the thread to the left and forward around the thread guide.
Draw the thread to the rear and to the right around under the guide plate.
Firmly pull the thread to the right while holding it with both hands.
2 Thread guide
3 Guide plate

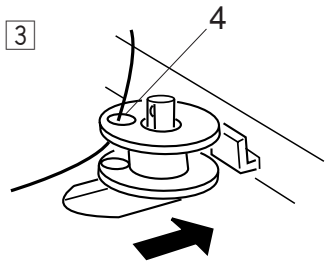

3 Pass the thread through the hole in the bobbin from the inside to the outside.
Put the bobbin on the bobbin winder spindle.
Push the bobbin to the right.
4 Hole

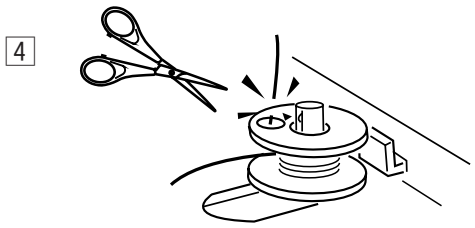

4 Hold the free end of the thread in your hand and start the machine.
Stop the machine when the bobbin has wound several layers, and cut the thread close to the hole in the bobbin.

NOTE:
Set the speed control slider at the fastest position.

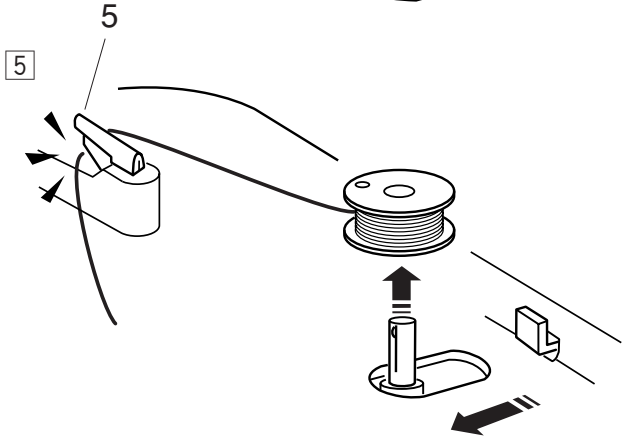

5 Start the machine again.
Stop the machine when the bobbin is fully wound and stops spinning.
Return the bobbin winder spindle to its original position.
Remove the bobbin and cut the thread with the thread cutter.
5 Thread cutter

NOTE:
For safety purposes, the machine will automatically stop 2 minutes after starting bobbin winding.

Inserting the Bobbin

1

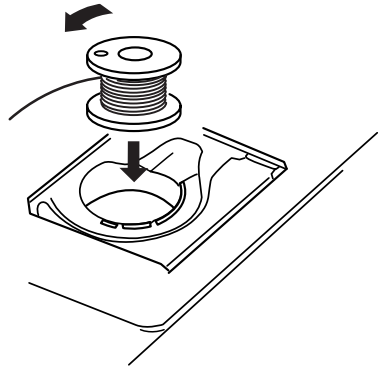

1 Place the bobbin in the bobbin holder with the thread running off counterclockwise.

2

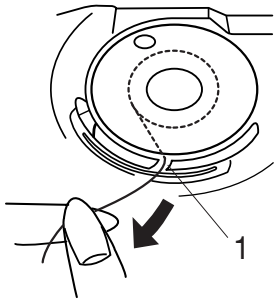

2 Guide the thread into the front notch on the bobbin holder.

1 Front notch

3

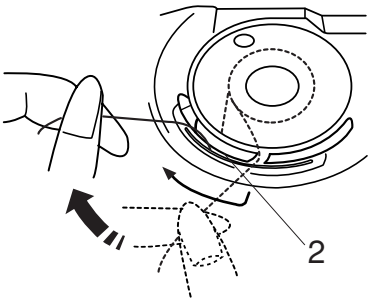

3 Draw the thread to the left, sliding it between the tension spring blades.

2 Tension spring blades

4

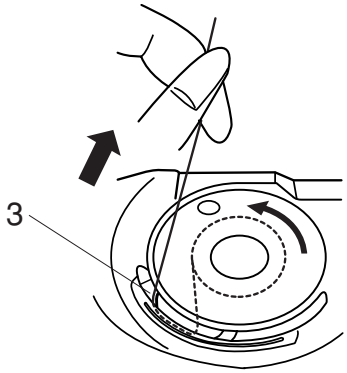

4 Continue to draw the thread lightly until the thread slips into the side notch.

3 Side notch

5

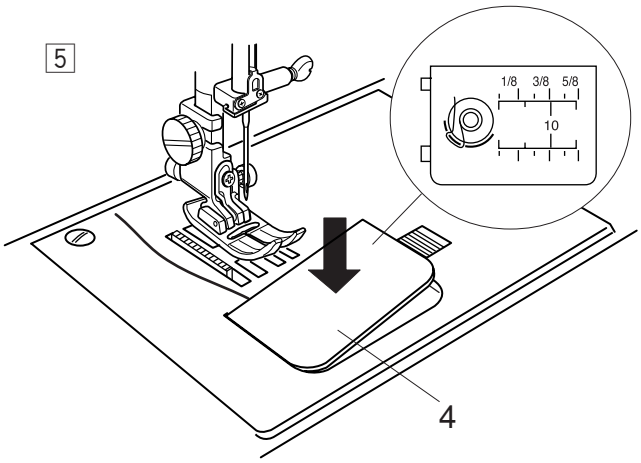

5 Pull out about 10 cm (4") of thread to the rear. Reattach the hook cover plate.

4 Hook cover plate

NOTE:
The threading chart is shown on the hook cover plate for your reference.

Threading the Machine

Raise the presser foot. Press the needle up/down position button twice to raise the needle.
Turn the power switch off.

Pass the thread in order from 1 to 7.

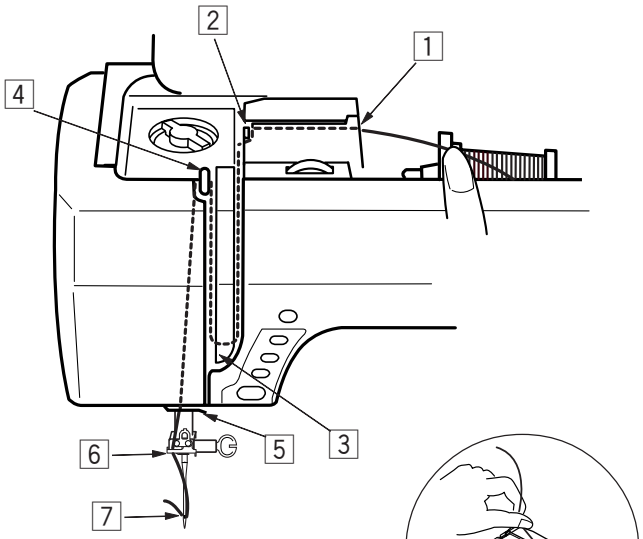

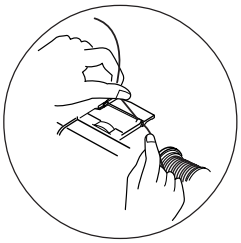

1 2

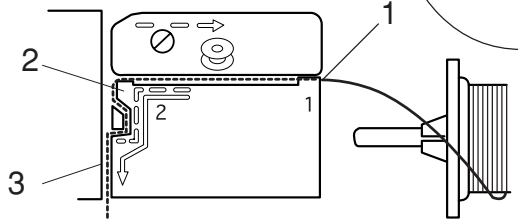

1 Hold the thread with both hands and pass the thread into the guide slot.
   1 Guide slot

2 Draw the thread to the left and around the corner of the guide toward you.
Pull the thread along the channel.
   2 Corner of the guide
   3 Channel

3

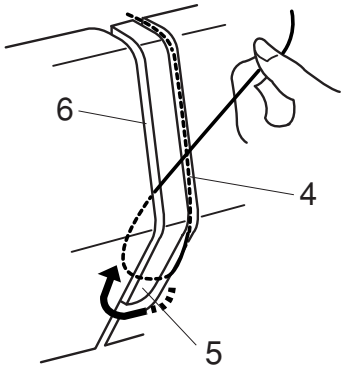

3 Draw the thread down along the right channel and around the bottom of the thread guide plate.
Pull the thread up along the left channel.
   4 Right channel
   5 Thread guide plate
   6 Left channel

4

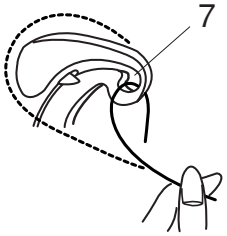

4 While holding the thread at the spool, firmly draw the thread up and to the back of the take-up lever. Draw the thread forward to draw it into the eye of the take-up lever.
   7 Eye of the take-up lever

5 6

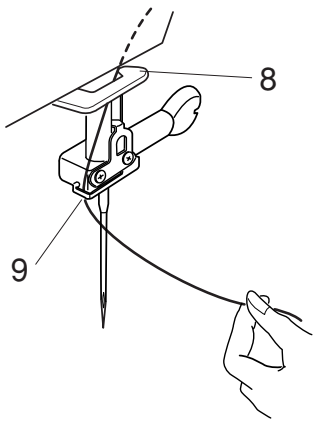

5 Then pull the thread down along the left channel and through the lower thread guide.
   8 Lower thread guide

6 Slide the thread behind the needle bar thread guide from the left.
   9 Needle bar thread guide

7 Thread the needle with the needle threader (refer to the next page).

Built-in needle threader

NOTE:
The needle threader can be used with a #11 to #16 needle, or a #11 Blue needle.
Thread size 50 to 90 is recommended.

1

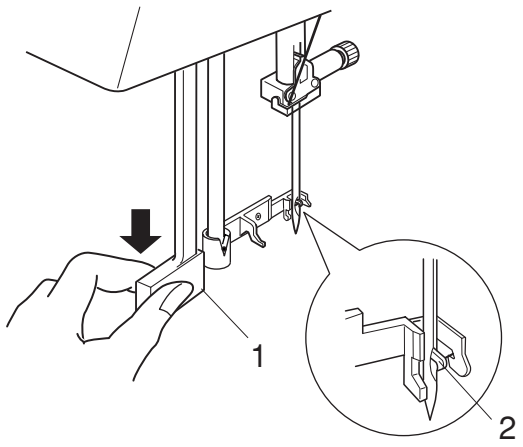

1 Lower the presser foot. Raise the needle to its highest position. Turn the power switch off.
Pull down the needle threader knob as far as it will go. The threader hook comes out through the needle eye from behind.
1 Knob
2 Threader hook

2

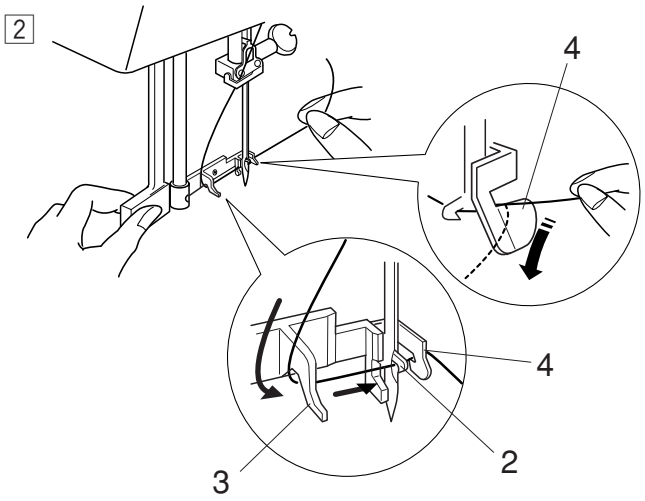

2 Draw the thread from the left to the right, under the left guide, threader hook and the right guide.
Draw the thread around the right guide toward you.
3 Left guide
4 Right guide

3

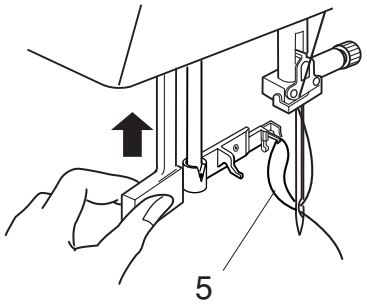

3 Raise the threader slowly so a loop of the thread is pulled up through the needle eye.
5 Thread loop

4

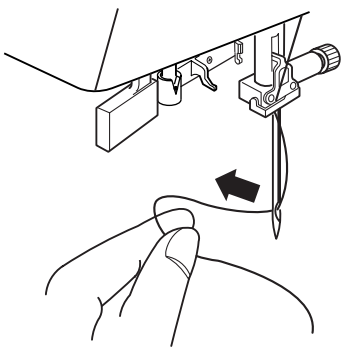

4 Pull the thread end through the needle eye.

NOTE:
The needle threader cannot be used with the twin needle.

Drawing Up the Bobbin Thread

1

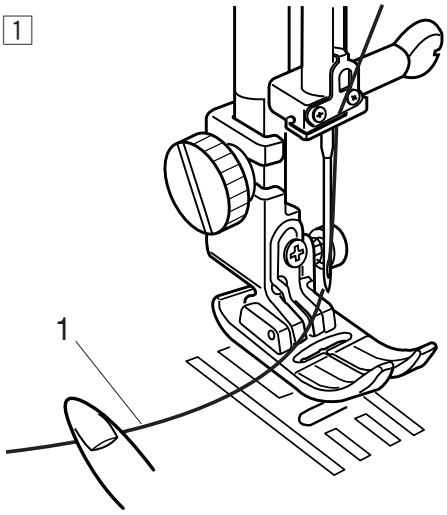

1 Raise the presser foot lifter.
Hold the needle thread with your finger.
1 Needle thread

2

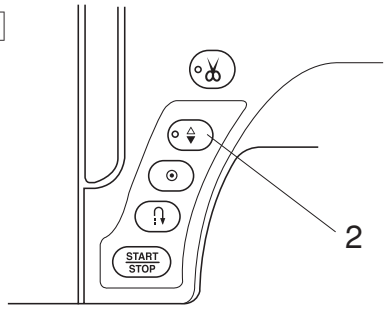

2 Press the needle up/down position button twice to draw up the bobbin thread.
2 Needle up/down position button

3

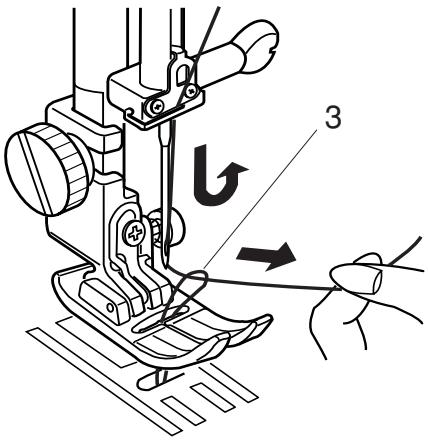

3 Pull the needle thread to bring up the loop of bobbin thread.
3 Loop of bobbin thread

4

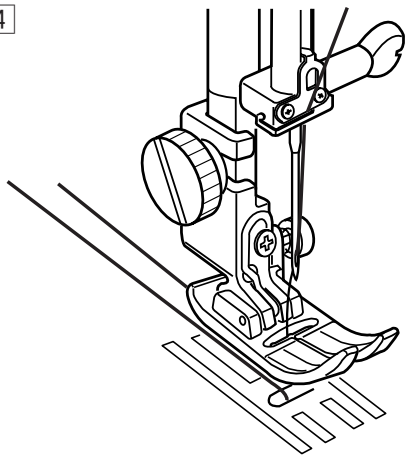

4 Pull both threads 10 cm (4") and draw them to the rear under the presser foot.

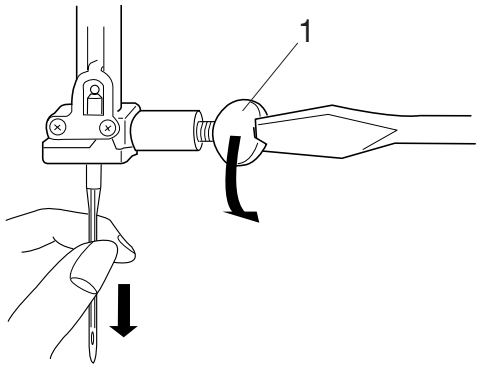

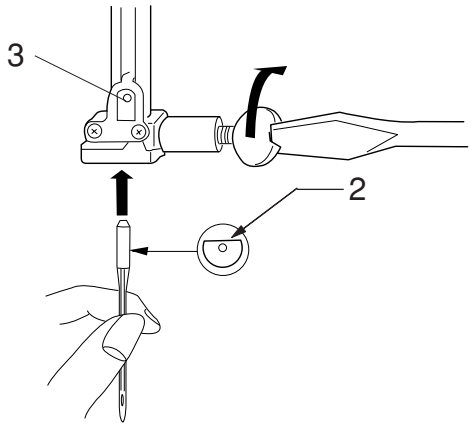

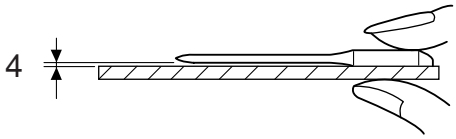

Changing Needles

CAUTION:
Always make sure to turn the power switch off and disconnect the machine from the power supply before changing the needle.

Raise the needle by pressing the needle up/down position button and lower the presser foot.
Turn the power switch off.

Loosen the needle clamp screw and remove the needle from the clamp.

1 Needle clamp screw

Insert a new needle into the needle clamp with the flat side of the needle to the rear.
When inserting the needle into the needle clamp, push it up against the stopper pin and tighten the needle clamp screw firmly with a screwdriver.

2 Flat side
3 Stopper pin

To check needle straightness, place the flat side of the needle onto something flat (a needle plate, glass etc.)
The gap between the needle and the flat surface should be consistent.
Never use a blunt needle.

4 Gap

Fabric		Thread	Needle
Light	Lawn Georgette Tricot Wool Polyester	Silk #80-100 Cotton #80-100 Synthetic #80-100	#9/65–11/75
Medium	Cotton Polyester Fine jersey Wool	Silk #50 Cotton #60-80 Synthetic #50-80 Cotton #50	#11/75–14/90 #14/90
Heavy	Denim Jersey Coating Quilting	Silk #50 Cotton #40-50 Synthetic #40-50 Silk #30 Cotton #50	#14/90–16/100 #16/100

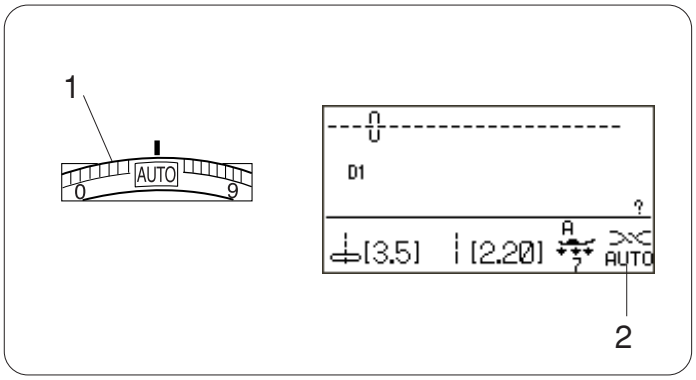

Balancing Thread Tension

Auto-thread tension

For general sewing, set the thread tension dial at AUTO, which covers a wide range of sewing conditions. Recommended tension setting for the selected pattern is indicated on the LCD screen.

1 Thread tension dial
2 Recommended tension setting

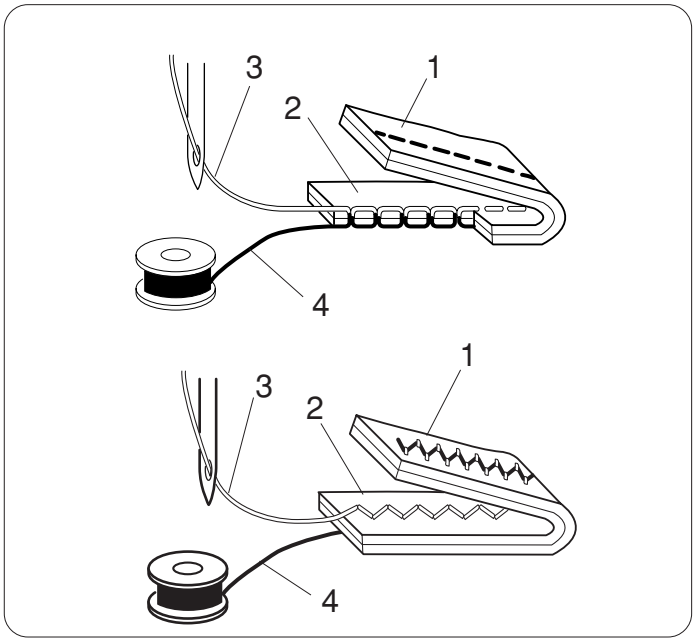

Balanced thread tension

For straight stitch sewing, both needle and bobbin threads will join at the middle of the fabric.

For zigzag stitch sewing, the needle thread will appear slightly on the wrong side of the fabric.

1 Wrong side of fabric
2 Right side of fabric
3 Needle thread
4 Bobbin thread

Manual thread tension adjustment

You should adjust the tension manually if the LCD screen shows a tension setting other than AUTO.

You may also need to adjust tension manually depending on the sewing conditions such as the type of fabric and number of layers.

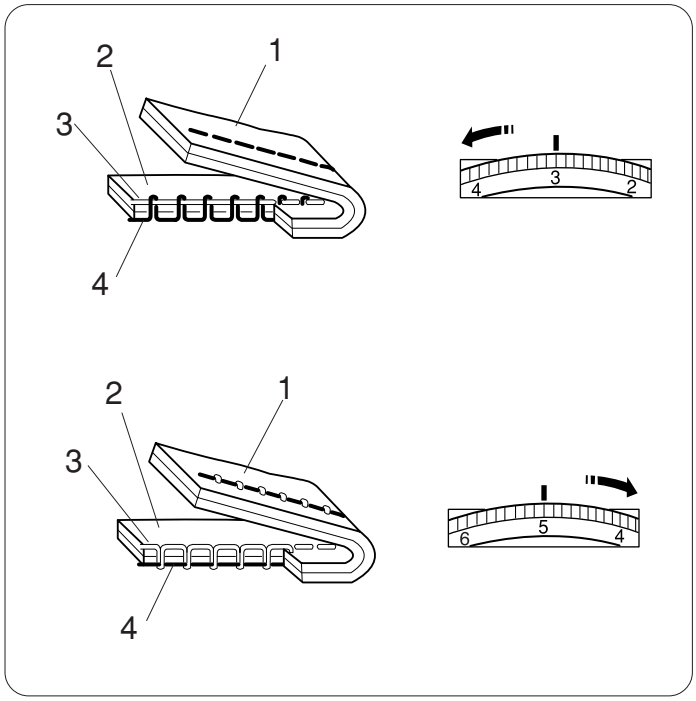

If the needle thread is too tight, the bobbin thread appears on the right side of the fabric.

1 Wrong side of fabric
2 Right side of fabric
3 Needle thread
4 Bobbin thread

Turn the thread tension dial to a lower number to decrease the thread tension.

If the needle thread is too loose, the needle thread loops on the underside of the fabric.

1 Wrong side of fabric
2 Right side of fabric
3 Needle thread
4 Bobbin thread

Turn the thread tension dial to a higher number to increase the thread tension.

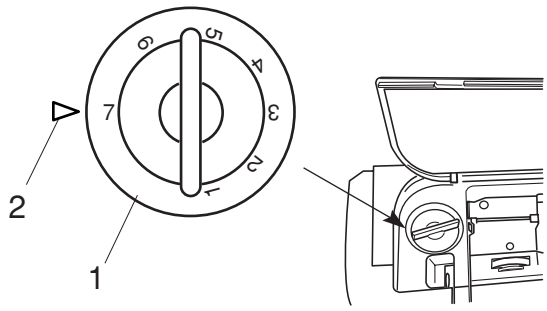

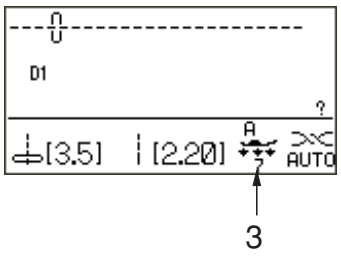

Adjusting the Foot Pressure

The foot pressure can be adjusted with the foot pressure dial located under the top cover.

The dial has 7 setting positions from 1 to 7.
For ordinary sewing, set “7” at the setting mark.

1 Foot pressure dial
2 Setting mark

Reduce the pressure when sewing fine synthetics and stretch fabrics.
To reduce the pressure, set the dial at a lower number.

The recommended dial setting for the selected pattern will be show on the LCD screen.
For example, set the dial at 5 for heirloom stitch patterns number 55 to 64. Set the dial at 4 for applique stitches.

3 Recommended setting

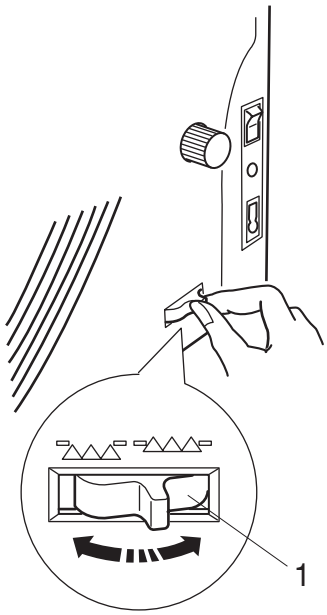

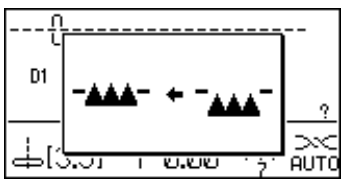

Dropping the Feed Dog

The feed dog can be lowered for basting, sewing on buttons, free motion quilting etc.

Shift the drop feed lever toward you to lower the feed dog.

1 Drop feed lever

Shift the drop feed lever away from you to raise the feed dog, it will return to the up position when you start the machine.

NOTE:
If you start the machine with the feed dog lowered, a message will appear on the LCD screen.
The machine will not run with the feed dog lowered when pattern number 23-33, 35-40 or monogram is selected.

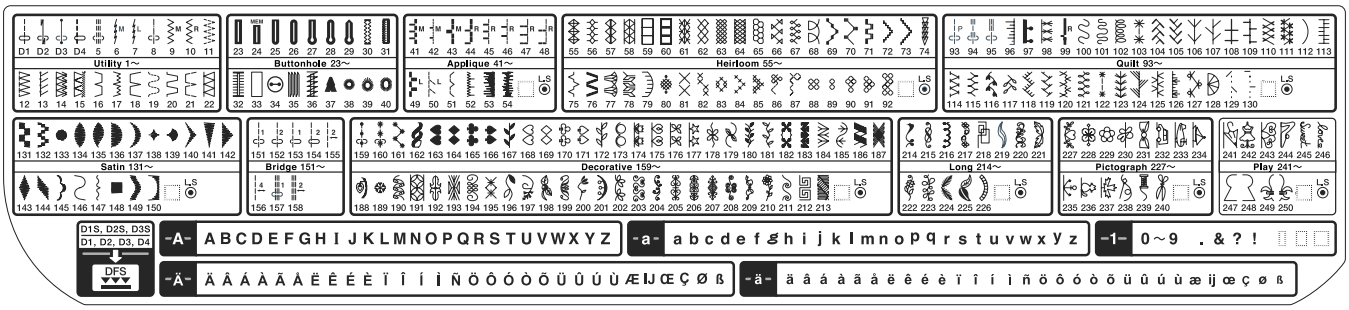

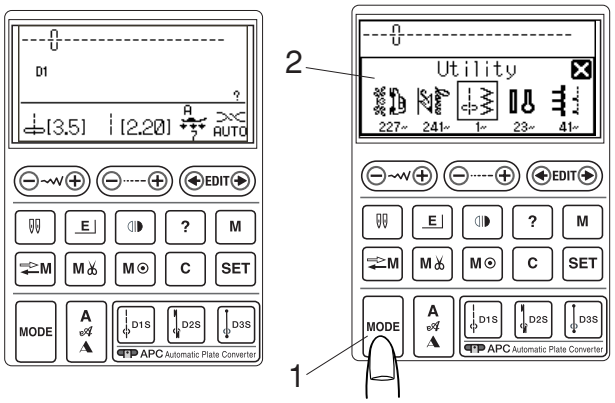

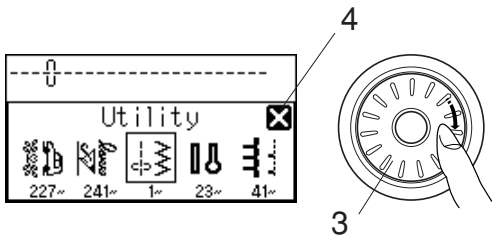

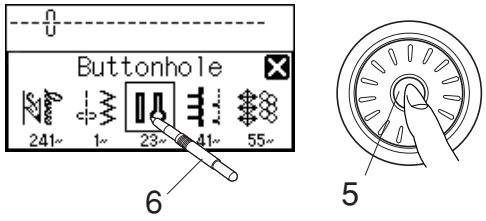

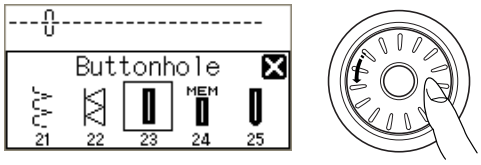

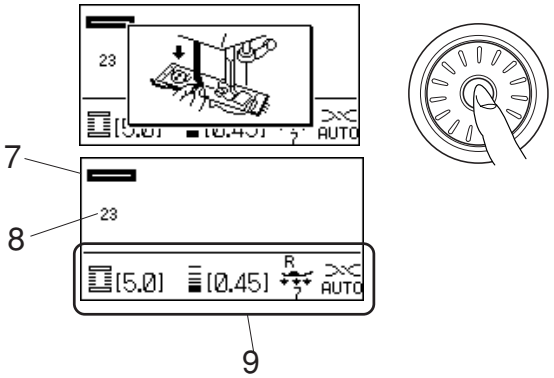

The stitch patterns are classified into 11 groups.
To select the desired stitch pattern, refer to the reference chart inside the top cover to identify the stitch group and pattern number.

When turning the power switch on, the LCD screen will show the straight stitch D1 selected.

Press the mode key and the group selection window will open.

1 Mode key
2 Group selection window

Turn the jog dial clockwise or counterclockwise to browse through the groups.

3 Jog dial

NOTE:
To close the group selection window, press the cross mark with the touch panel stylus.

4 Cross mark

Press the confirm button in the center of the jog dial to select the group enclosed with a frame, or press the icon of the desired group with the touch panel stylus.

5 Confirm button
6 Touch panel stylus

The pattern selection window will open.
Turn the jog dial and press the confirm button, or press the stitch icon to select the desired stitch pattern.

The LCD screen will display the pattern number and stitch image, along with information such as stitch width and length, recommended foot, foot pressure and tension setting.

7 Stitch image
8 Pattern number
9 Information

NOTE:
A message window will be displayed for briefly when certain stitch pattern is selected.

CAUTION:
Do not press the surface of the LCD screen with hard or sharp objects like pencils, screwdrivers or the like. Use the touch panel stylus to press the LCD screen.

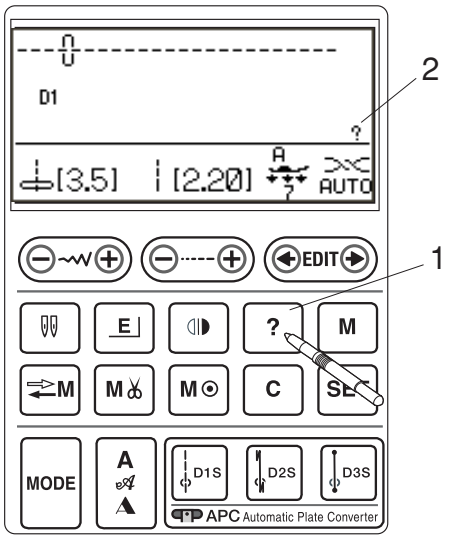

Help key

Pressing this key will show alternative applications and useful information for the following stitch patterns:



1 Help key

When one of the above patterns is selected, the “?” mark is displayed.

2 “?” mark

Example: Stitch pattern D1 is selected.

When you press the help key, the following will be displayed on the LCD screen.

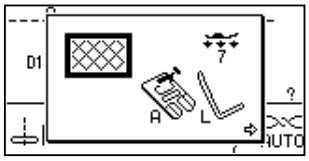

The first page shows the zigzag foot A and quilting guide bar for quilting.

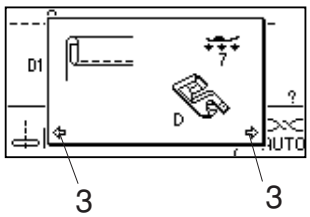

The second page shows the rolled hem foot D for rolled hemming applications.

NOTE:
Arrow marks indicate that there are previous and next pages to be displayed.

3 Arrow marks

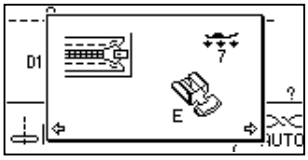

The third page shows the zipper foot E for zipper sewing applications.



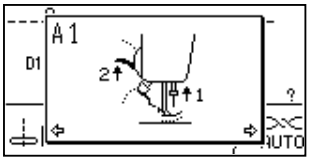

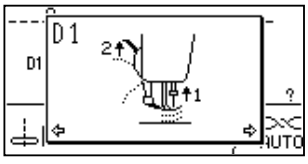

Pages A1 to A6 and D1 to D6 show step-by step instructions on how to engage and disengage the dual feed device.

NOTES:
Use the jog dial to scroll through the pages.
To close the help window, press the help key again or press the clear key.

Customizing Machine Settings

You can customize the machine settings to your preference.

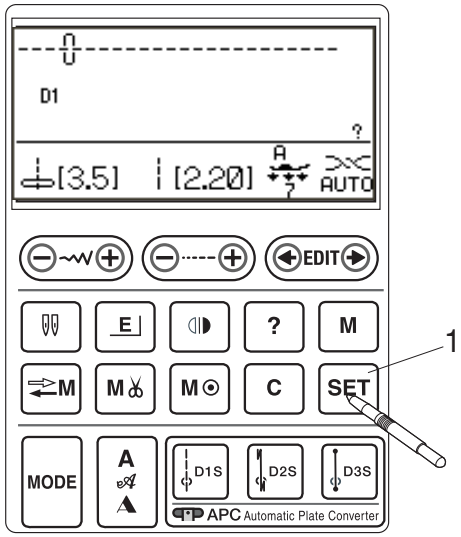

Press the set key and the LCD screen will show the machine setting window.

1 Set key
2 Machine setting window

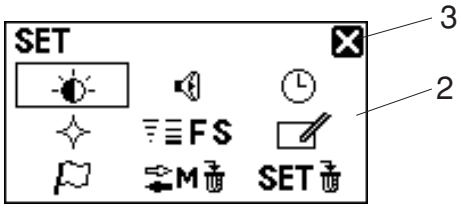

To close the machine setting window, press the cross mark.

3 Cross mark

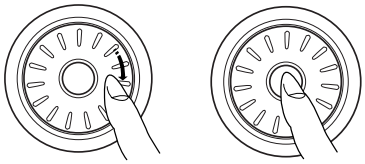

Turn the jog dial to select the desired item to set and press the confirm button

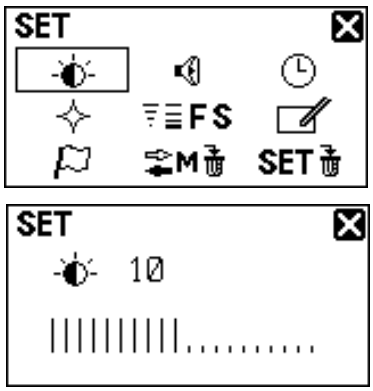

Screen brightness

The screen brightness can be adjusted from level 0 to 20. The preset level is 10.

Turn the jog dial to adjust the screen brightness.
Press the confirm button to register the new setting.

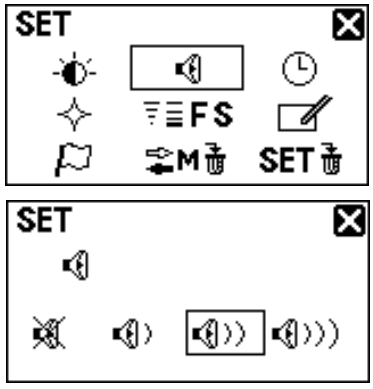

Buzzer sound

The level of the buzzer sound can be adjusted and you can mute the buzzer in normal operation.

Turn the jog dial to select the desired sound level; mute, low normal or loud.
Press the confirm button to register the new setting.
You can select the desired level by also pressing a sound level icon with the touch panel stylus.

NOTE:
Items and settings can also be selected by pressing the relevant icon on the LCD screen

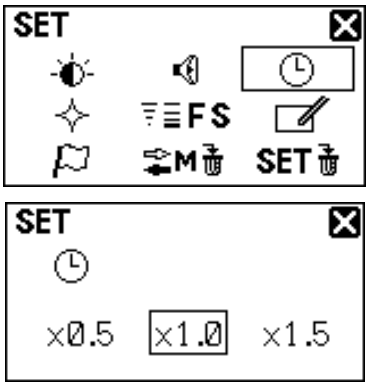

Sub window display time

A sub window will appear when selecting certain patterns such as buttonholes.
The duration of the sub window display can be altered.

Turn the jog dial to select x0.5 (1 second), x1.0 (2 seconds) or x1.5 (3 seconds).
The preset time is x1.0 (2 seconds).
Press the confirm button to register the new setting.

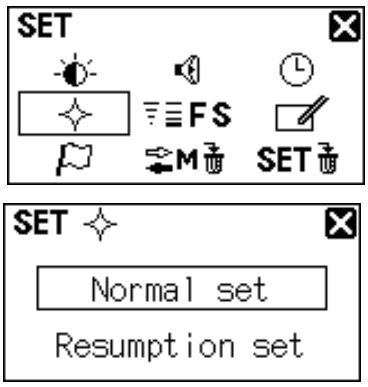

Resumption setting

The last pattern sewn before turning the power off can be recalled when turning the power on again by setting the resumption setting on.

Turn the jog dial to select the normal set or resumption set.
Press the confirm button to register the new setting.

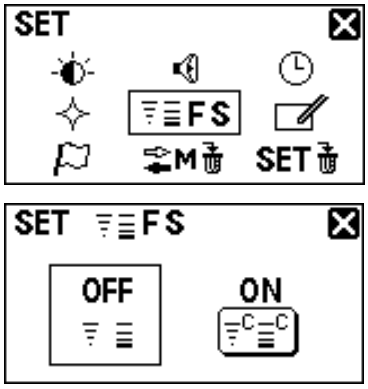

Favorite stitch adjustment

If you wish to save the altered stitch length and width for future use, turn on this option.

Turn the jog dial to select ON or OFF.
Press the confirm button to register the new setting.

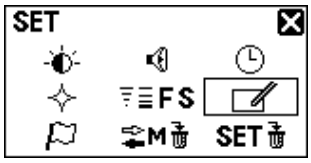

1

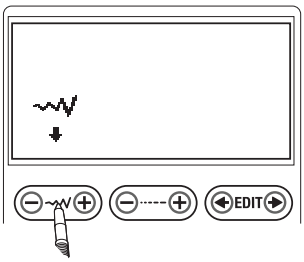

2

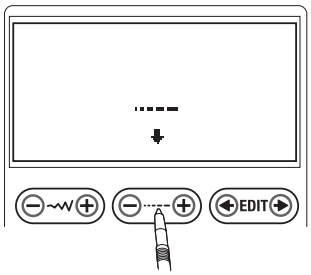

3

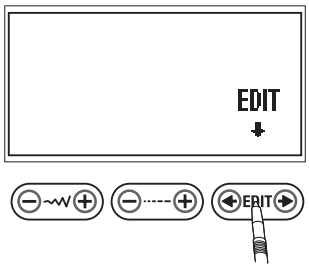

4

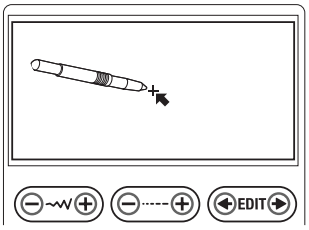

5

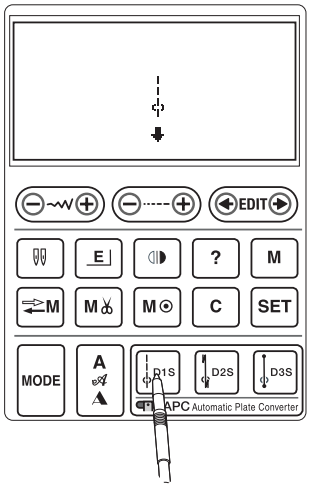

5

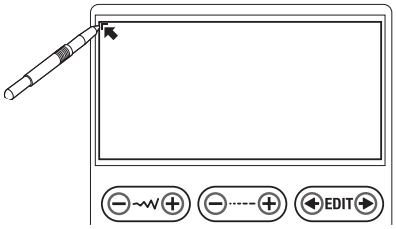

Touch panel calibration

If the touch panel keys seem out of alignment, calibrate the key position as follows.

1 Press the center of the stitch width adjusting key with the touch panel stylus.

2 Press the center of the stitch length adjusting key with the touch panel stylus.

3 Press the center of the edit key with the touch panel stylus.

4 Press the “+” sign that appears on the LCD screen with the touch panel stylus.

5 Press the center of the D1S key with the touch panel stylus.

6 Press the “⌐” sign that appears on the LCD screen with the touch panel stylus.
The new settings are registered.

To start over the calibration again press the confirm button.

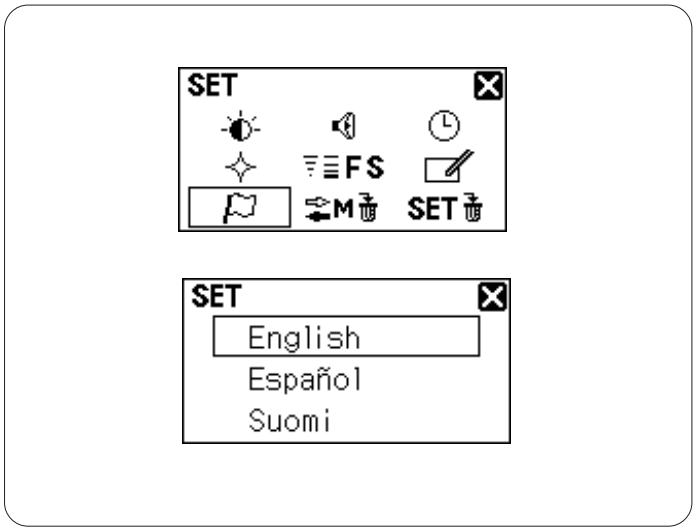

Language selection

You can choose one of the following languages for screen display.

1 English
2 Spanish
3 Finnish
4 French
5 German
6 Italian
7 Dutch
8 Portuguese
9 Russian
10 Swedish
11 Polish

Turn the jog dial to select the desired language.
Press the confirm button to register the new setting.

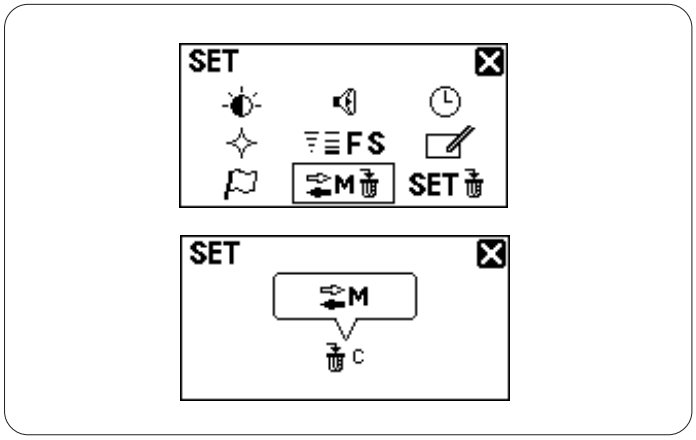

Deleting stored pattern combinations

All the pattern combinations stored in the memory bank can be deleted at one time.

Press and hold the clear key [C] to delete all the stored pattern combinations.
If you do not wish to delete all the pattern combinations, press the cross mark to return to the previous display.

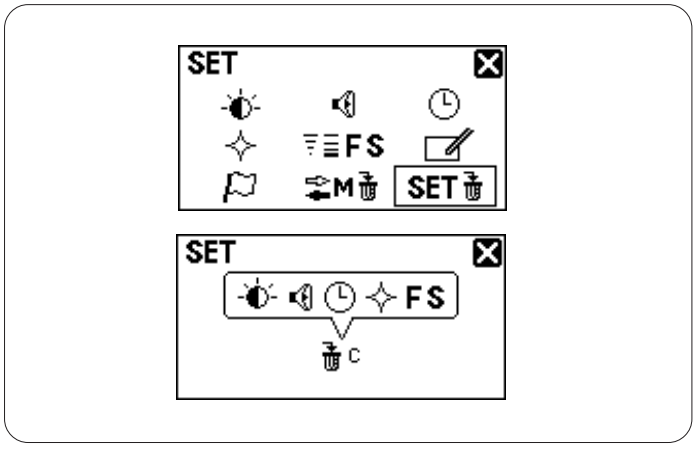

Resetting all to default

All the customized settings can be reset to the original settings (factory settings).

Press and hold the clear key to reset all the settings to default.

NOTE:
The touch screen calibration and language selection will not be reset.

If you do not wish to reset the settings, press the cross mark to return to the previous display.

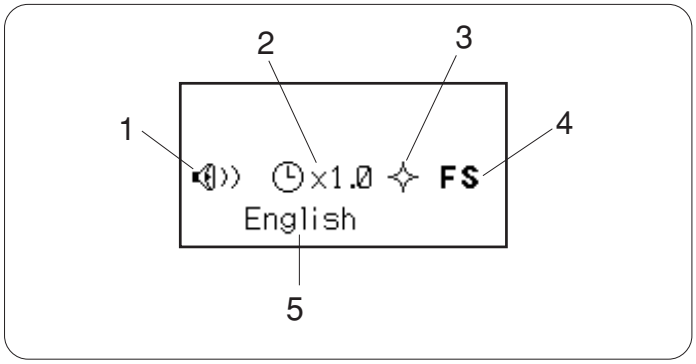

When turning the power on, the opening window shows the customized settings that you have made.

1 Buzzer sound
2 Sub window display time
3 Resumption setting
4 Favorite stitch adjustment
5 Language selection

UTILITY STITCHES

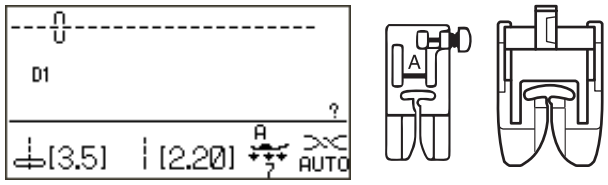

Straight Stitch

Machine settings

Pattern:	D1 (Utility)
Thread tension:	AUTO
Presser foot:	Zigzag foot A or Dual feed foot AD
Foot pressure:	7

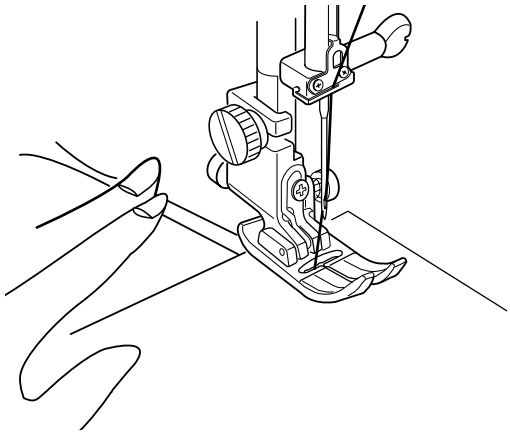

Starting to sew

Raise the presser foot and position the fabric next to a seam guide on the needle plate. Lower the needle at the point where you wish to start.

Pull the needle and bobbin threads toward the rear.
Lower the presser foot.

Depress the foot control or press the start/stop button to start sewing.
Gently guide the fabric along the seam guide letting the fabric feed naturally.

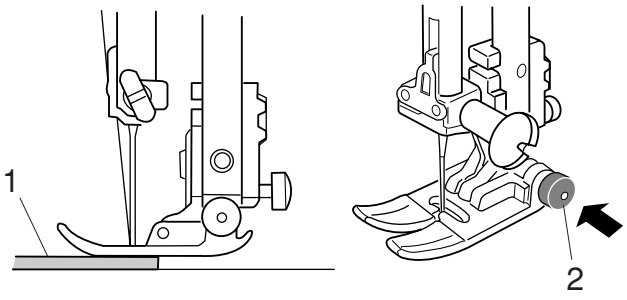

Sewing from the edge of thick fabric

The black button on the zigzag foot locks the foot in the horizontal position.
This is helpful when you start sewing from extreme edge of thick fabrics or sewing across a hem.
Lower the needle into the fabric at the point where you wish to start sewing.
Lower the foot while pushing the black button in. The foot is locked in the horizontal position to avoid slipping.

1 Thick fabrics
2 Black button

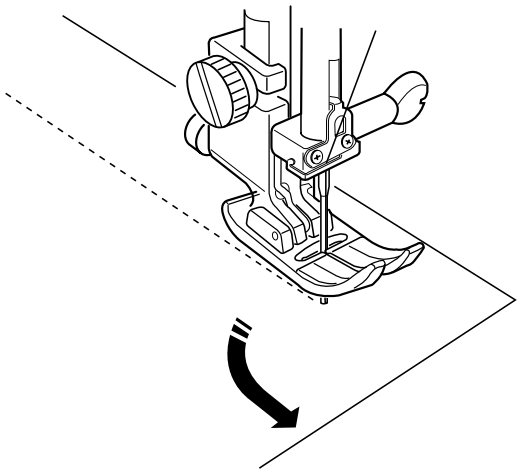

Changing sewing direction:

Stop the machine and bring the needle down into the fabrics by pressing the up/down needle position button.
Raise the presser foot.
Pivot the fabric around the needle to change the sewing direction as desired.
Lower the presser foot and start sewing in a new direction.

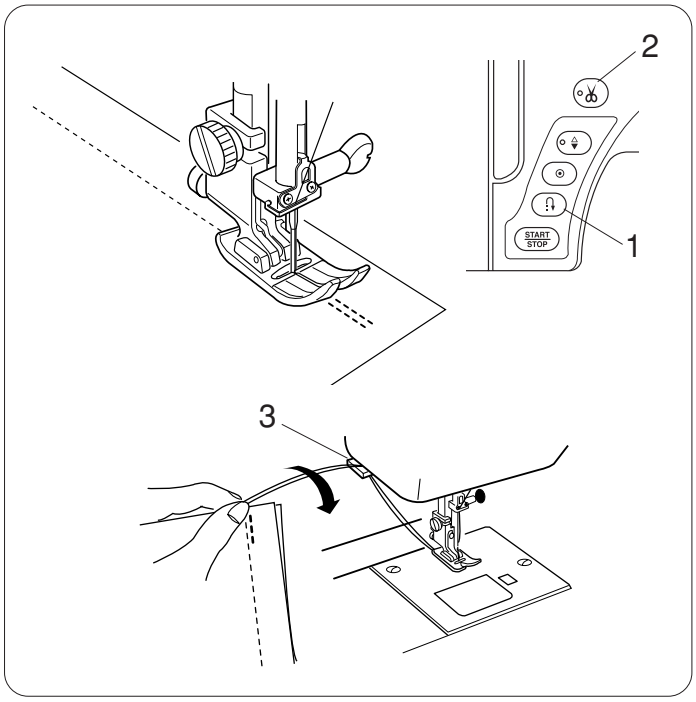

Securing seam

For fastening the ends of seams, press the reverse button and sew several reverse stitches.
The machine sews in reverse as long as you press and hold in the reverse button.
Press the reverse button once when sewing the Lock-a-Matic stitch (pattern D2/D2S) or locking stitch (pattern D3/D3S) so the machine will lock the stitch off and stop automatically.

1 Reverse Button

After finishing sewing, press the thread cutter button to cut the threads.

2 Thread Cutter Button

NOTE:
Use the thread cutter on the face plate to cut the specialized threads, thick threads #30 or thicker.

3 Thread Cutter

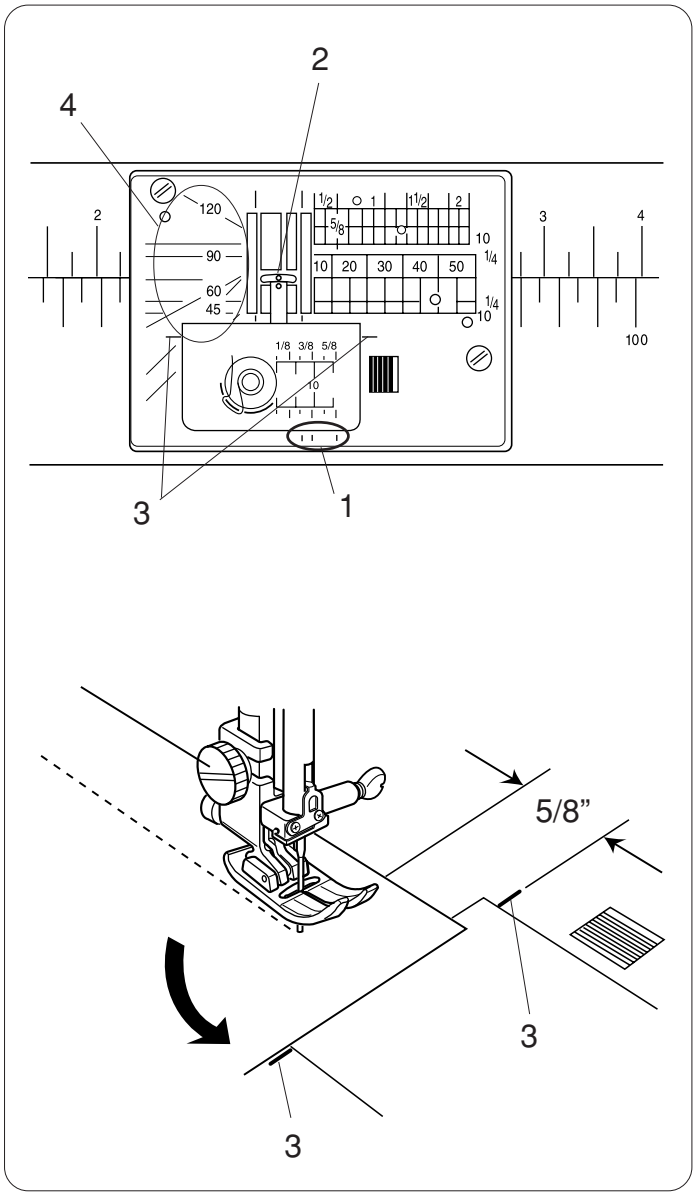

Using the Seam Guides

The seam guides are marked on the needle plate, free arm and hook cover.
The seam guides for 1/4”, 3/8” and 5/8” are also marked on the front of the needle plate.

1 Seam guides on the front of the needle plate

The numbers on the needle plate indicate the distance from the center needle position in millimeters and inches.

2 Center Needle Position

The cornering guides are very useful when turning a square corner.

3 Cornering guide

The angle scales on the needle plate are useful for patchwork piecing.

4 Angle scales

Turning a square corner

To maintain a 5/8˝ seam allowance after turning a square corner, use the cornering guide on the needle plate.

Stop sewing when the front edge of fabric reaches the cornering guide lines.

Lower the needle by pressing the needle up/down position button.

Raise the presser foot and turn the fabric 90 degrees.

Lower the presser foot, and begin stitching in the new direction.

3 Cornering guide

Assembling the Extra Wide Table

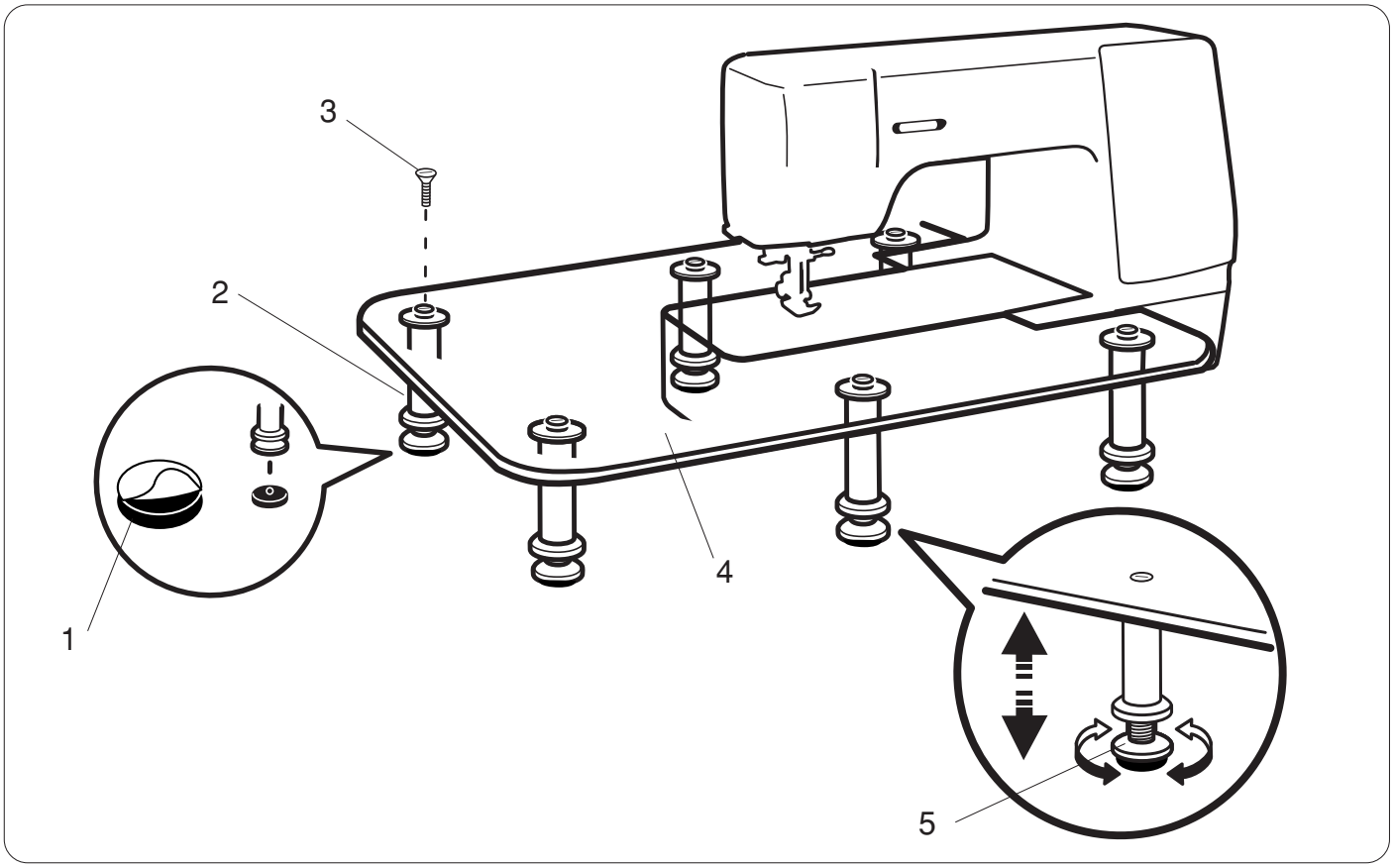

Peel off the backing paper from the rubber soles and attach to the bottom of the legs.

1 Rubber sole
2 Leg
3 Setscrew

Attach the 6 legs to the table top with the setscrews.

4 Table top

Place the assembled table to the machine as shown.
Slide the table to the right until the table catches the pin on the backside of the free arm.
Adjust the height of the table top by turning the adjusting screw.

5 Adjusting screw

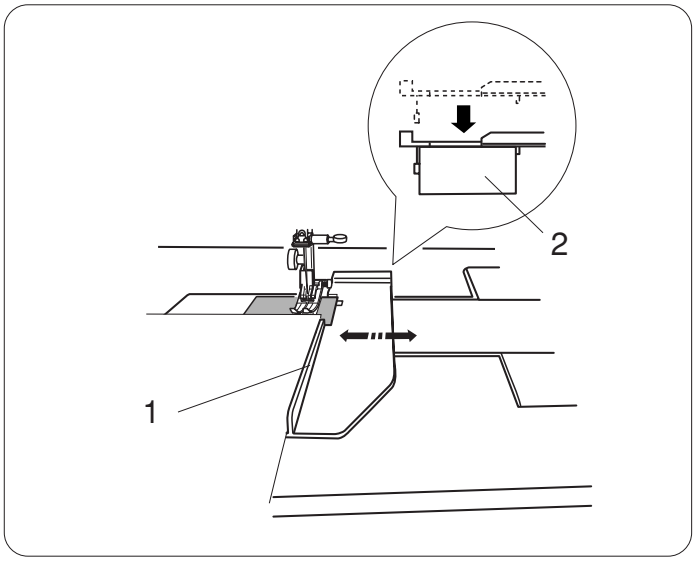

Using the Cloth Guide

Remove the extension table and attach the extra wide table.
Attach the cloth guide to the free arm by pushing the cloth guide down to snap it in place.
Slide the cloth guide to the desired position.
Place the fabric with its edge against the cloth guide and sew.

1 Cloth guide
2 Free arm

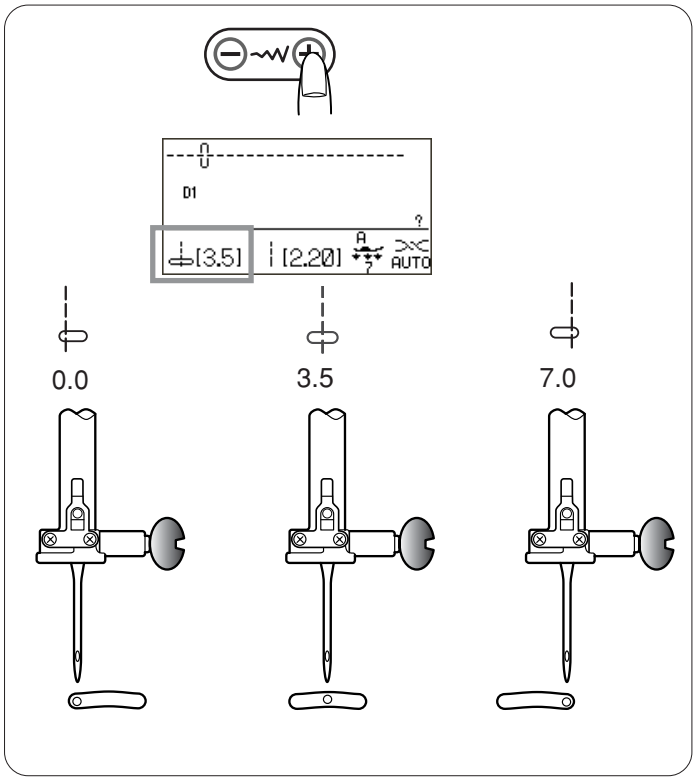

Adjusting the needle drop position

The needle drop position of the straight stitches can be altered by pressing the stitch width adjusting key.

NOTE:
The value in brackets indicates the preset setting.

Press the “+” sign on the key to move the needle bar to the right.

Press the “–” sign on the key to move the needle bar to the left.

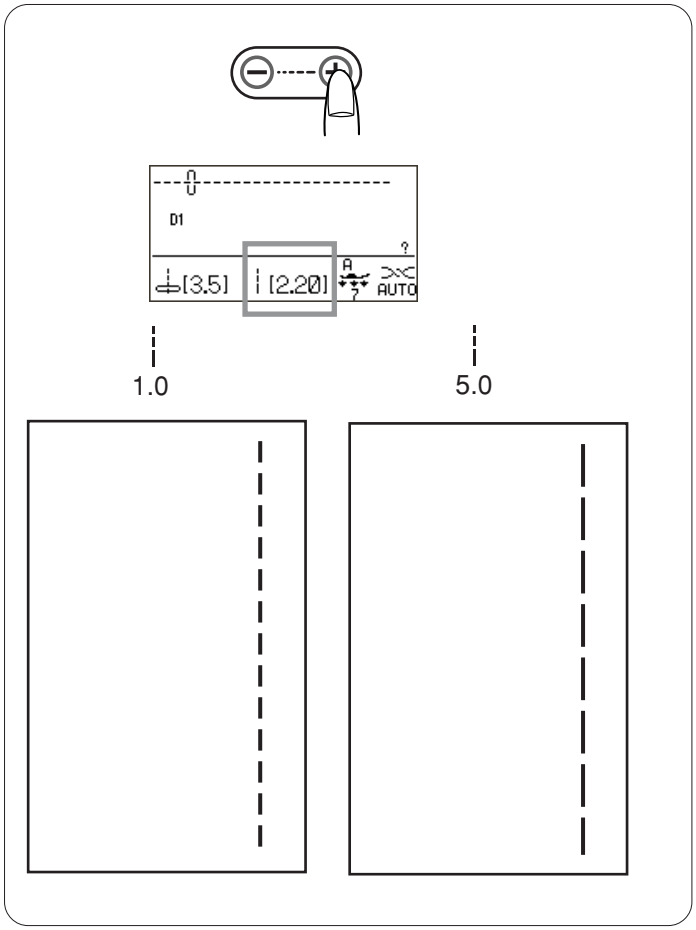

Adjusting the stitch length

The stitch length can be altered by pressing the stitch length adjusting key.
The stitch length indication will change as the key is pressed.

NOTE:
The value in the brackets indicates the preset setting.

Press the “+” sign on the key to increase the stitch length.

Press the “–” sign on the key to decrease the stitch length.

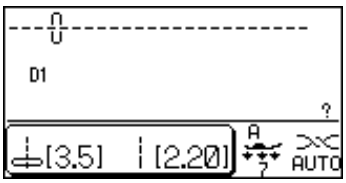

Customizing the preset values of the stitch length and width

The preset values of the stitch length and width are optimized for each pattern.
However, you can change the preset values to suit your sewing preferences, if the favorite stitch adjustment option is turned on (refer to page 26).

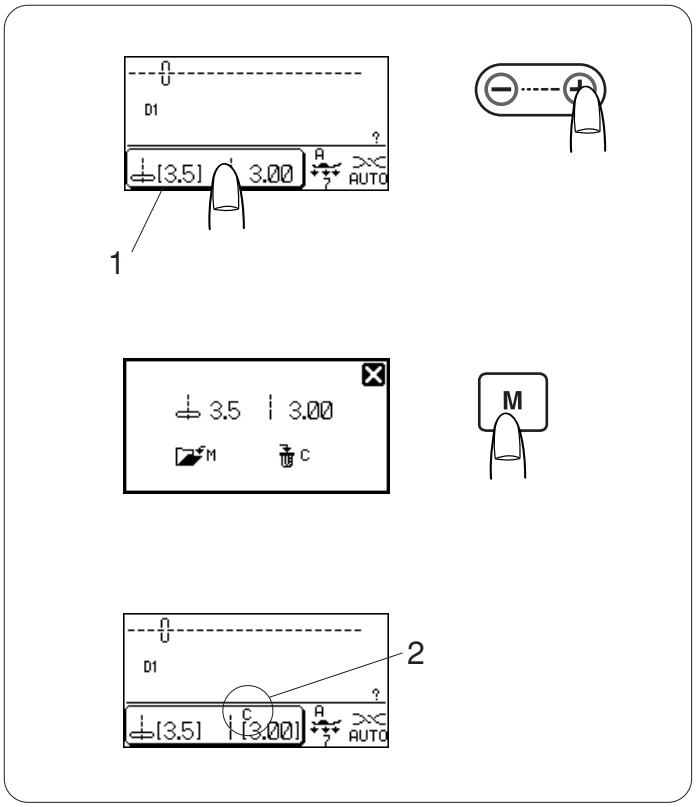

Example: To change the preset value of the stitch length

Select the stitch pattern you wish to change the preset value.
The indication of stitch width and length are surrounded with a frame and will work as a custom setting key when the favorite stitch adjustment option is turned on.

1 Custom setting key

Adjust the stitch length as you prefer..

Press the custom setting key. The LCD screen will display the custom setting window.

Press the memory key [M] or its icon on the LCD screen to save the custom settings.

Press the clear key [C] or its icon on the LCD screen to restore the default settings.

The LCD screen will return to the previous window and the symbol “C” will appear on the screen to indicate that the preset values have been changed.

2 Symbol “C”

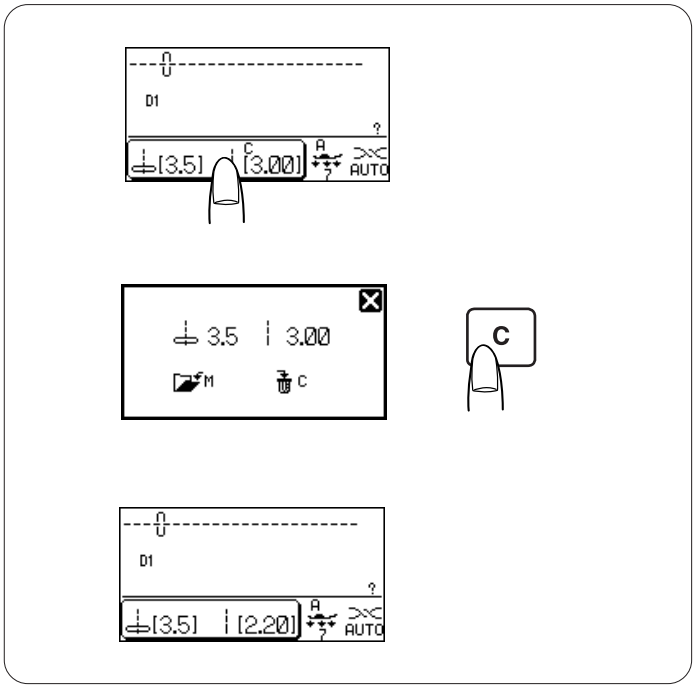

Restoring the default settings

Select a pattern for which you have changed the preset settings.

Press the custom setting key. The LCD screen will show the custom setting window with the customized settings.

Press the clear key. The LCD screen will return to the previous window and the symbol “C” will disappear.
The preset values will return to the default setting (the same settings as when you purchased the machine).

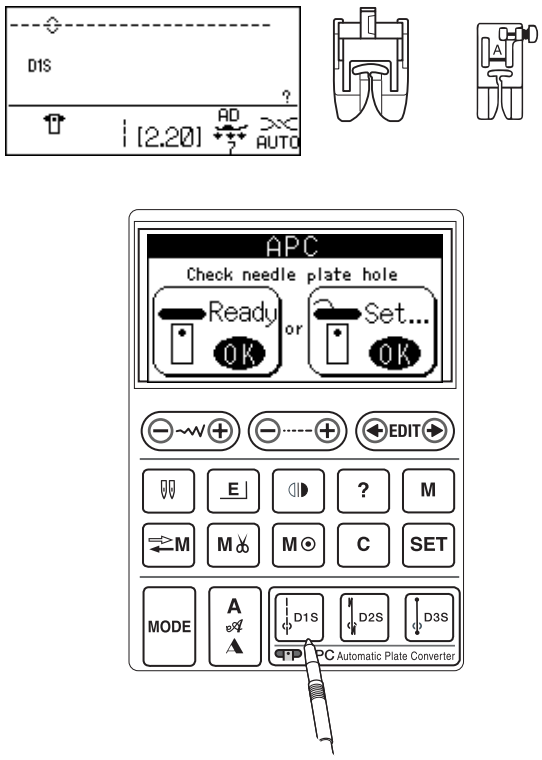

Automatic plate converter

Setting for straight stitch

When stitch pattern D1S, D2S or D3S is selected, the automatic plate converter will close to set up the needle plate hole for straight stitch.

NOTE:
Use the dual feed device and dual feed foot when sewing fine fabrics and stretch fabrics for the best sewing results. The zigzag foot can be used for sewing sturdy fabrics.

Select pattern D1S, D2S or D3S, and the APC setting window will open.

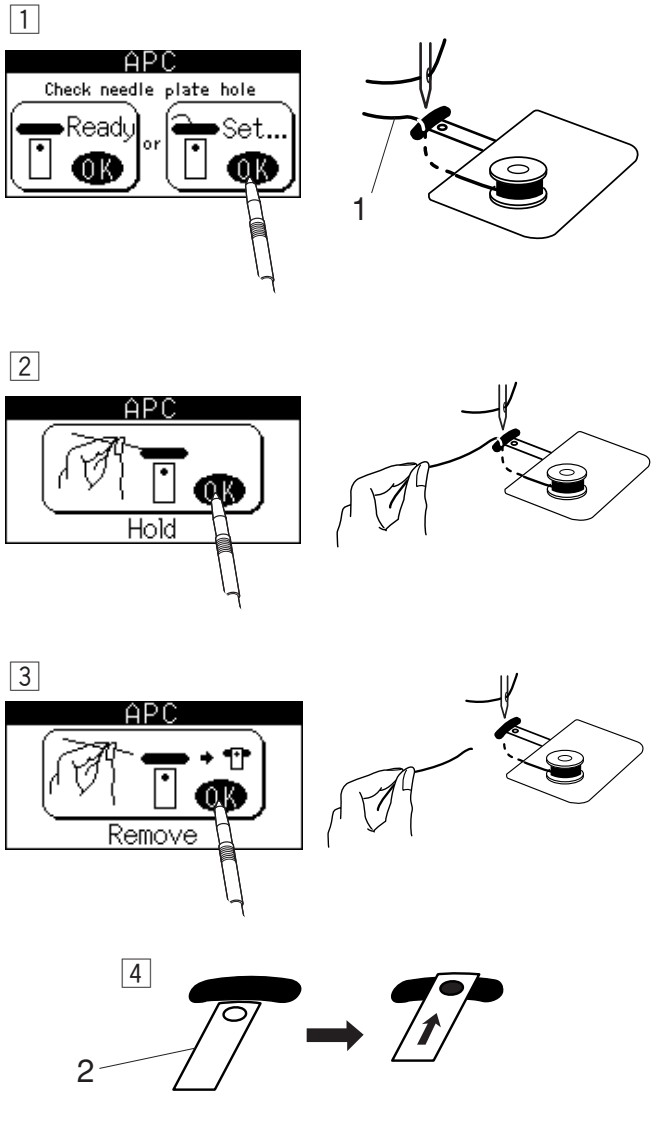

1 If the bobbin thread is pulled out through the needle plate hole, press the OK key under “Set” and follow the instructions that appear in the APC setting window.
1 Bobbin thread

NOTE:
Press the OK key under “Ready” to close the plate converter if the bobbin thread has already been cut with the automatic thread cutter.

2 Hold the bobbin thread and press the OK key.
The bobbin thread will be trimmed automatically.

3 Remove the tail of the bobbin thread and press the OK key.

4 The automatic plate converter will close.
2 Automatic plate converter

Opening the automatic plate converter

The automatic plate converter should be open if any pattern other than D1S, D2S or D3S is selected.

The APC setting window will open if a stitch pattern other than D1S, D2S or D3S is selected while the automatic plate converter is closed.

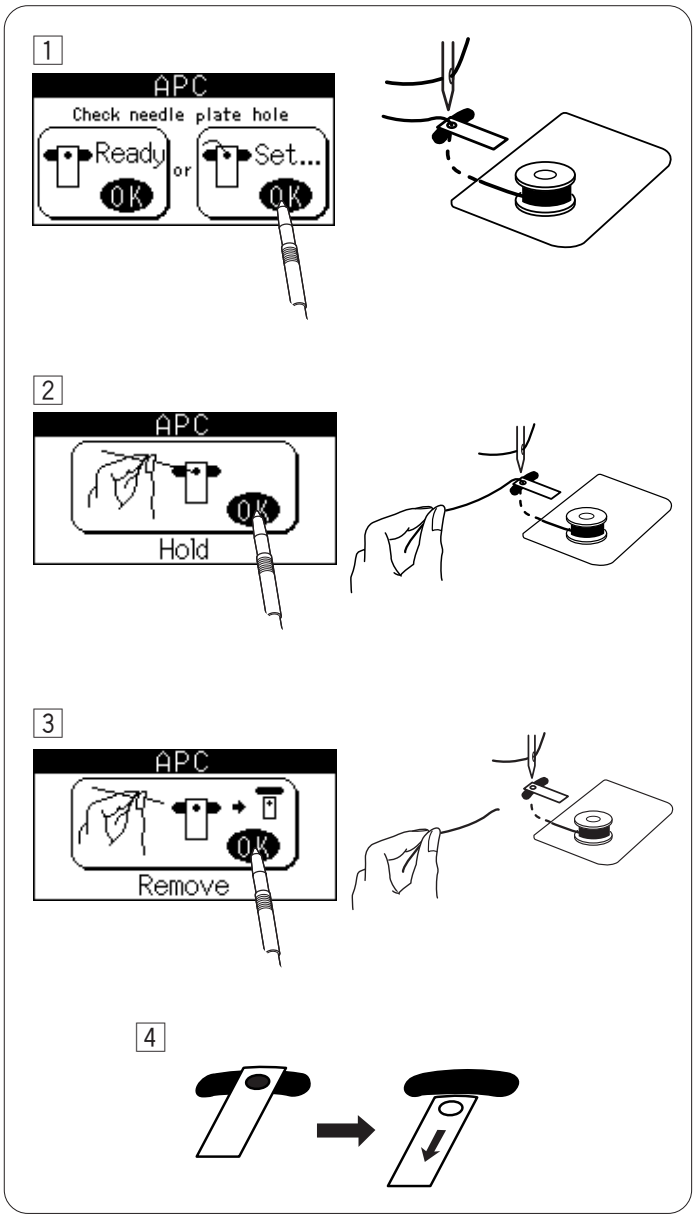

1 If the bobbin thread is pulled out through the hole in the plate converter, press the OK key under “Set” and follow the instructions that appear in the APC setting window.

NOTE:
Press the OK key under “Ready” to open the plate converter if the bobbin thread has already been cut with the automatic thread cutter.

2 Hold the bobbin thread and press the OK key. The bobbin thread will be trimmed automatically.

3 Remove the tail of the bobbin thread and press the OK key.

4 The plate converter will open.

Variety of straight stitches

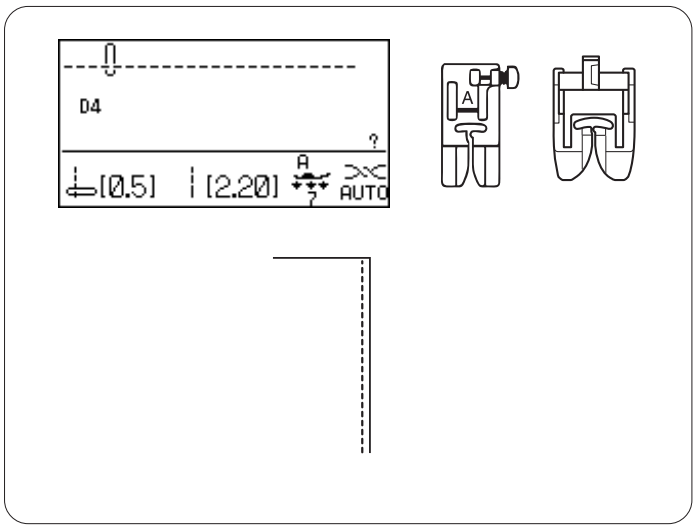

Straight stitch with left needle position

Machine settings

Pattern: D4 (Utility)
Thread tension: AUTO
Presser foot: Zigzag foot A, Dual feed foot AD
Foot pressure: 7

Use this stitch to seam the edge of fabrics.

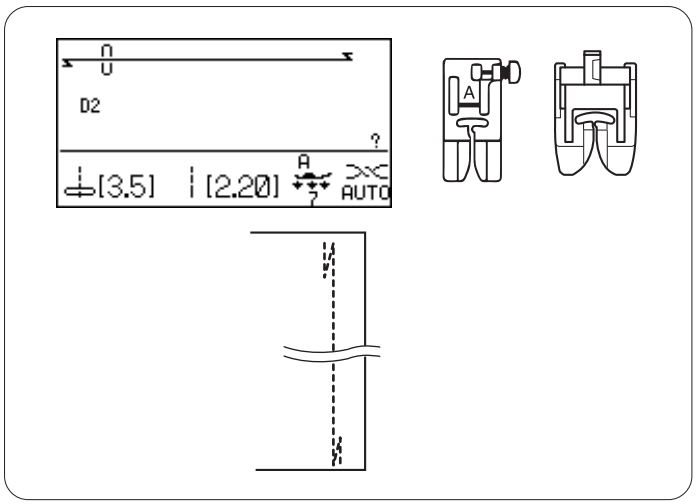

Lock-a-Matic stitch

Machine settings

Pattern: D2 (Utility)
Thread tension: AUTO
Presser foot: Zigzag foot A, Dual feed foot AD
Foot pressure: 7

Use this stitch to secure the beginning and the end of a seam with backstitching. When you reach the end of the seam, press the reverse button once. The machine will sew four reverse stitches, four forward stitches, and then stop sewing automatically.

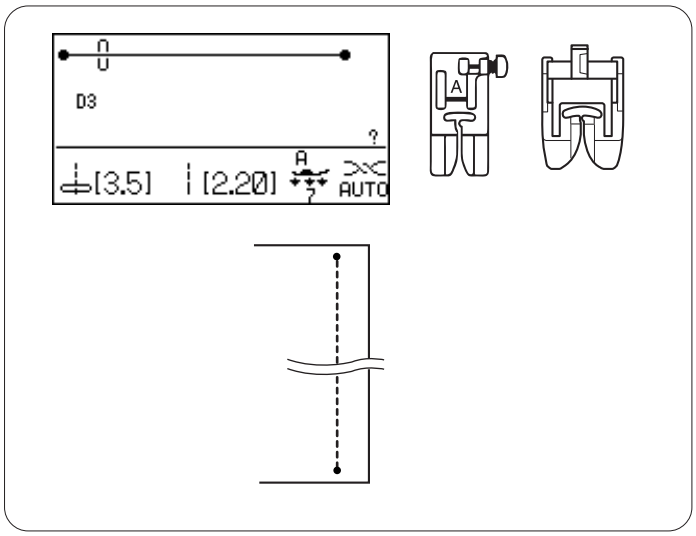

Locking stitch

Machine settings

Pattern: D3 (Utility)
Thread tension: AUTO
Presser foot: Zigzag foot A, Dual feed foot AD
Foot pressure: 7

This unique stitch is used where an invisible locking stitch is needed. Lower the needle close to the front edge of the fabric.
The machine will sew several locking stitches in place and continue sewing forward. When you press the reverse button at the end of the seam, the machine will sew several locking stitches in place, then stop sewing automatically.

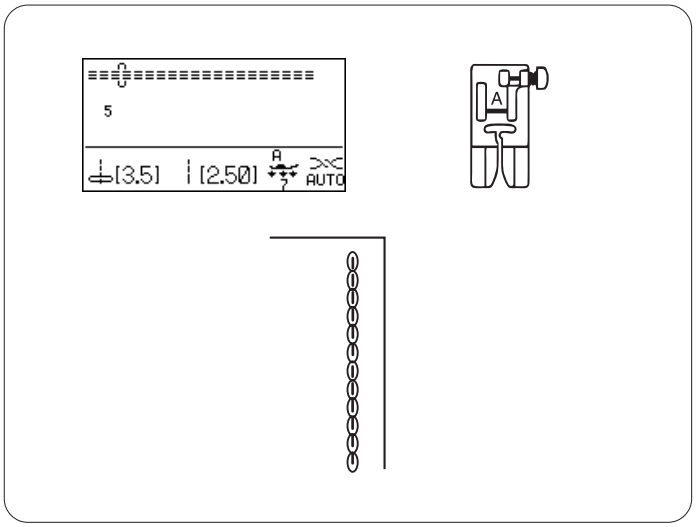

Triple stretch stitch

Machine settings

Pattern:	5 (Utility)
Thread tension:	AUTO
Presser foot:	Zigzag foot A
Foot pressure:	7

This strong, durable stitch is recommended for areas where both elasticity and strength are needed to ensure comfort and durability. Use it to reinforce areas such as crotch and armhole seams. Also use it when constructing items such as backpacks for extra strength.

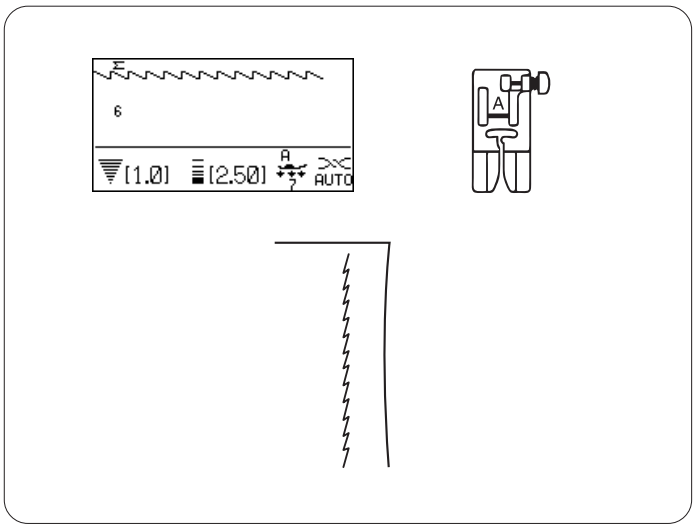

Stretch stitch

Machine settings

Pattern:	6 or 7 (Utility)
Thread tension:	AUTO
Presser foot:	Zigzag foot A
Foot pressure:	7

This is a narrow stretch stitch designed to eliminate puckering on knit fabrics and bias seams, while permitting the seam to be pressed completely open flat.

Stitch pattern 7 is a stretch stitch in the left needle position.
Use this stitch when seaming thin fabrics such as tricot and fine jersey.

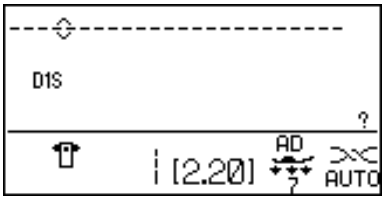

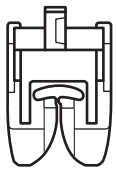

Sewing with the Dual Feed Device

Machine settings

Pattern:	D1S
Thread tension:	AUTO
Presser foot:	Dual feed foot AD
Foot pressure:	7

NOTE:
Patterns number D1, D2, D3, D4 and D1S, D2S, D3S can be sewn with the dual feed device.

The dual feed device is extremely effective for sewing with hard to feed material such as vinyl or leather. It also eliminates layer slippage.

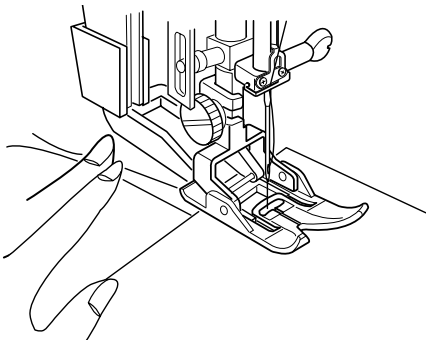

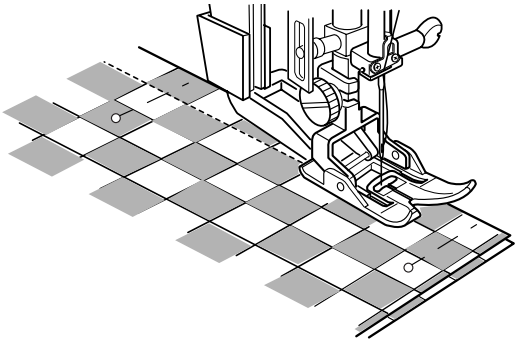

NOTE:
See page 13 for how to attach the dual feed foot and to engage the dual feed device.

Sewing

Raise the presser foot and position the fabric next to a seam guide on the needle plate. Lower the needle at the point where you wish to start.

Pull the needle and bobbin thread toward the rear. Lower the presser foot.

Start sewing at medium speed. Gently guide the fabric along the seam guide letting the fabric feed naturally.

When seaming plaid fabrics, match the plaids of the upper and lower layers and pin them together.

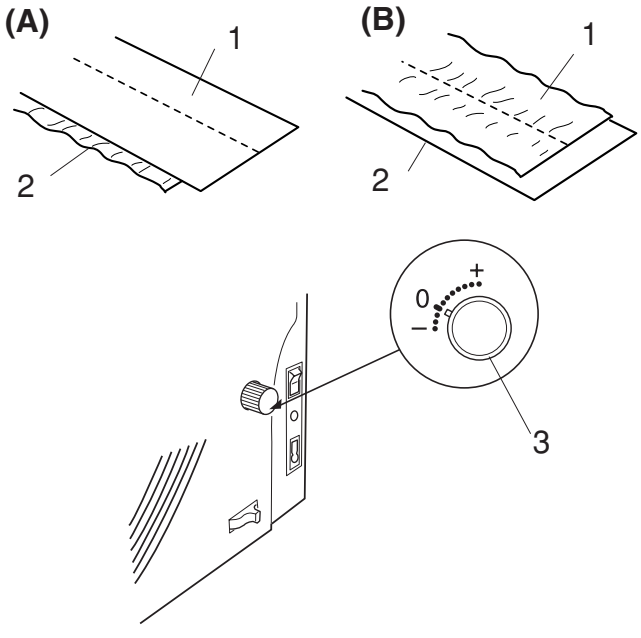

Dual feed balancing dial

The dual feed balancing dial should be set at “0”. However you may need to adjust the dual feed balance with this dial since the effect of the dual feed varies depending on the type of fabric.

Test sew on scrap piece of the fabric you intended to sew to check the feed balance.

(A): If the lower layer puckers, turn the dual feed balancing dial toward “+”.

(B): If the upper layer puckers, turn the dual feed balancing dial toward “–”.

1 Upper layer
2 Lower layer
3 Dual feed balancing dial

NOTE:
Reducing the foot pressure will also improve the feed balance.

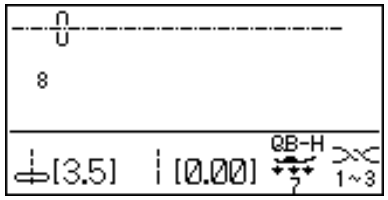

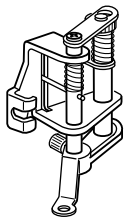

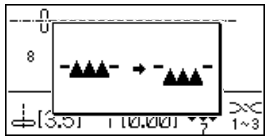

Basting

Machine settings

Pattern:	8 (Utility)
Thread tension:	1-3
Presser foot:	Convertible free motion quilting foot QB-H
Foot pressure:	7
Feed dog:	Lowered

When selecting the basting stitch, the LCD screen will advise you to lower the feed dog.
Refer to page 22 for how to lower the feed dog.

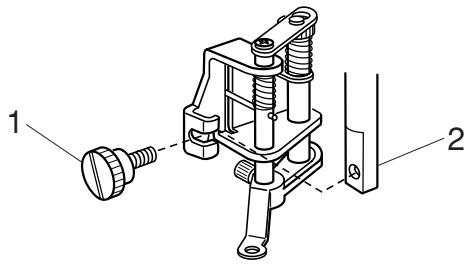

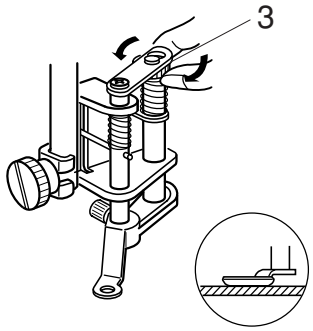

Attaching the convertible free motion quilting foot

Loosen the thumbscrew and remove the foot holder. Attach the convertible free motion quilting foot to the presser bar and tighten the thumbscrew firmly with the screwdriver.

Adjust the height of the foot by turning the round nut until bottom of the foot barely touches top of the fabric.

1 Thumbscrew
2 Presser bar
3 Round nut

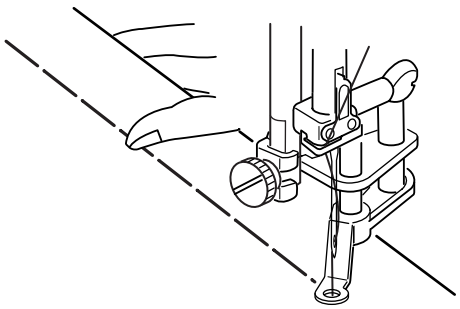



Sewing

Lower the feed dog.
Pass the needle thread through the hole in the foot and draw the thread to the rear.
Place the fabric and lower the presser foot.

Depress the foot control. The machine will take one stitch and stop automatically.

Release the foot control.

Hold the fabric taut and slide it to where you want the next stitch.

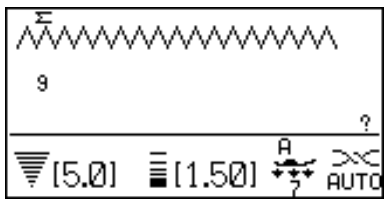

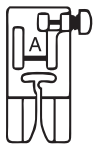

Zigzag Stitch

Machine Setting

Pattern:	9 or 10 (Utility)
Thread tension:	AUTO
Presser foot:	Zigzag foot A
Foot pressure:	7

Zigzag stitch is used for various sewing needs including overcasting. It can be used on most woven fabrics.
A dense zigzag stitch can also be used for applique.

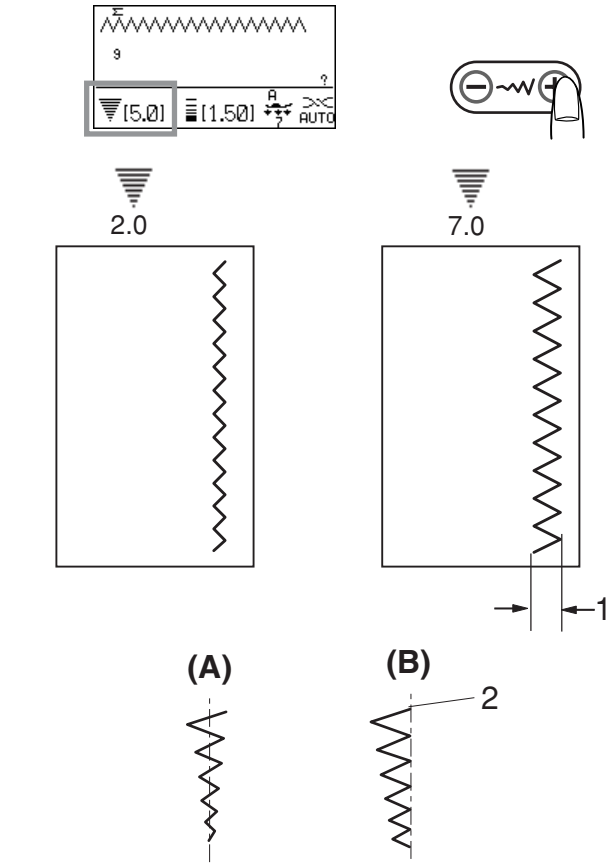

Adjusting the stitch width

Press the “+” sign on the stitch width adjusting key to increase the stitch width.

Press the “–” sign on the stitch width adjusting key to decrease the stitch width.

1 Stitch Width

(A): The pattern number 9 has a fixed center needle drop position. The stitch width changes symmetrically.

(B): The pattern number10 has a fixed right needle drop position. When you change the stitch width, the left needle drop position will change.

2 Fixed right needle position

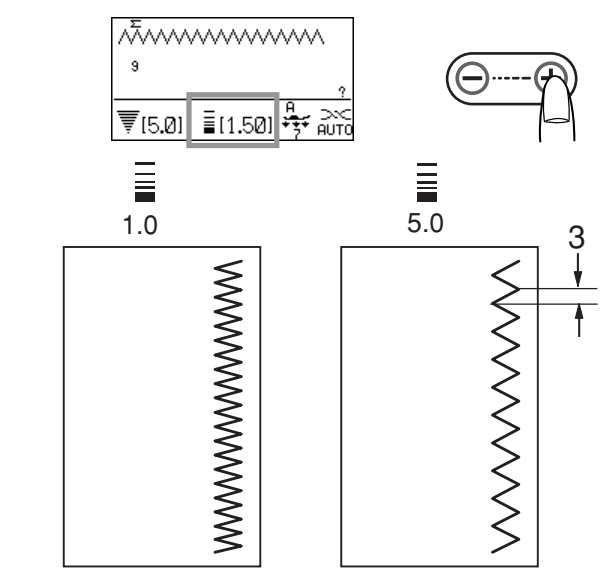

Adjusting the stitch length

Press the “+” sign on the stitch length adjusting key to increase the stitch length.

Press the “–” sign on the stitch length adjusting key to decrease the stitch length.

3 Stitch Length

NOTE:
The stitch length and width can be altered while stitching.

Overcasting Stitches

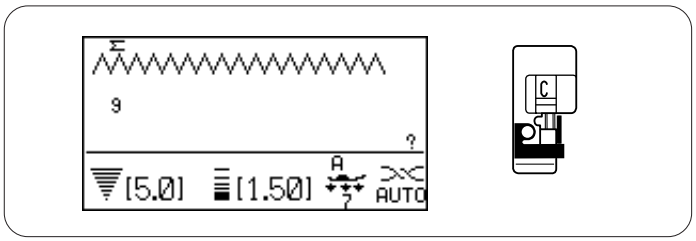

Overcasting with zigzag stitch

Machine settings

Pattern:	9 or 10 (Utility)
Thread tension:	AUTO
Presser foot:	Overcasting foot C
Foot pressure:	7

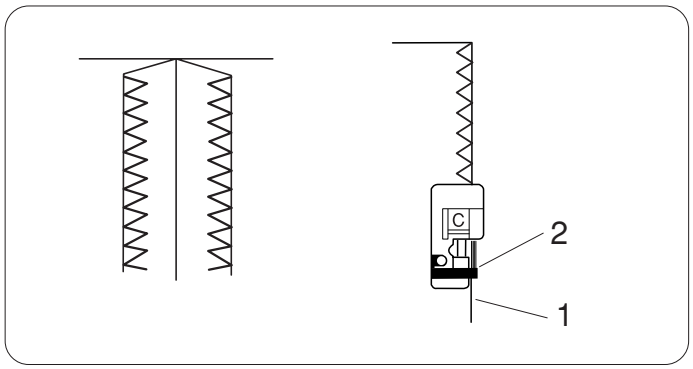

Place the fabric edge next to the guide of the foot and then sew.

1 Edge of fabric
2 Guide

⚠ CAUTION:
When you use the overcasting foot C, you must set the zigzag width at 4.5 or wider to prevent the needle from hitting the wires on the foot.

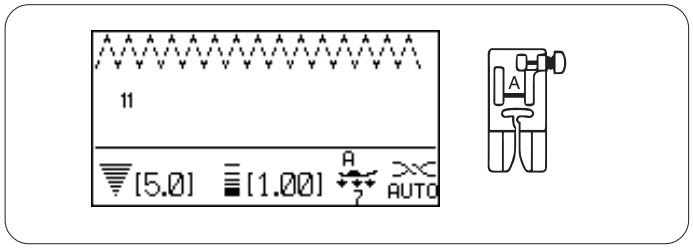

Multiple zigzag stitch (Tricot stitch)

Machine settings

Pattern:	11 (Utility)
Thread tension:	AUTO
Presser foot:	Zigzag foot A
Foot pressure:	7

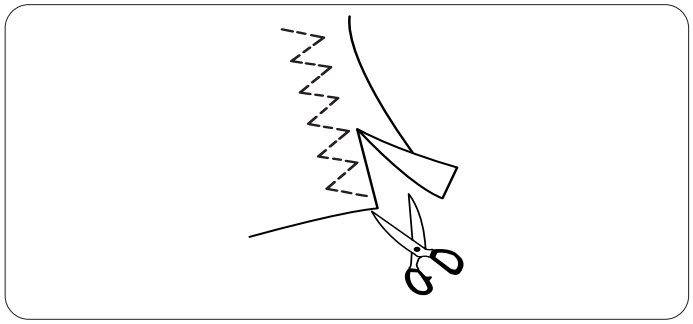

This stitch is used to finish a raw edge of synthetics and other stretch fabrics that tend to pucker.
Sew along the fabric edge leaving an adequate seam allowance.
After sewing, trim the seam allowance close to the stitches.

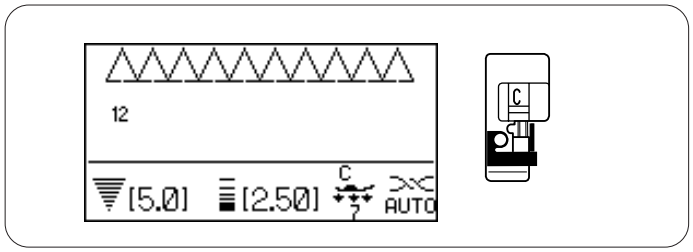

Overcasting stitch

Machine settings

Pattern:	12 (Utility)
Thread tension:	AUTO
Presser foot:	Overcasting foot C
Foot pressure:	7

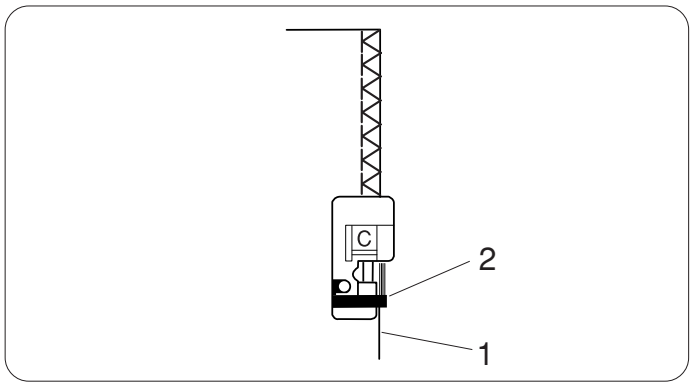

This stitch can be used to simultaneously seam and overcast edges of fabrics.
Use this stitch when you do not need to open seams flat.
Place the fabric edge next to the guide of the foot and then sew.

1 Edge of fabrics
2 Guide

NOTE:
The stitch width cannot be changed to less than 4.5.

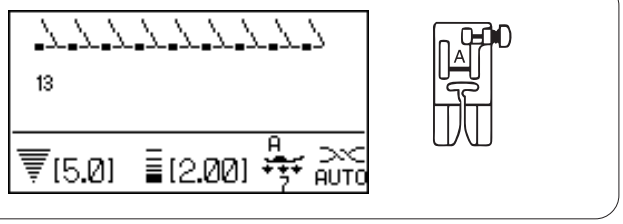

Knit stitch

Machine settings

Pattern:	13 (Utility)
Thread tension:	AUTO
Presser foot:	Zigzag foot A
Foot pressure:	7

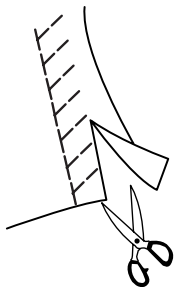

This stitch is recommended for sewing such fabrics as synthetic knits and stretch velour as it provides the greatest amount of elasticity and strength.
Sew along the fabric edge leaving an adequate seam allowance.
After sewing, trim the seam allowance close to the stitches.

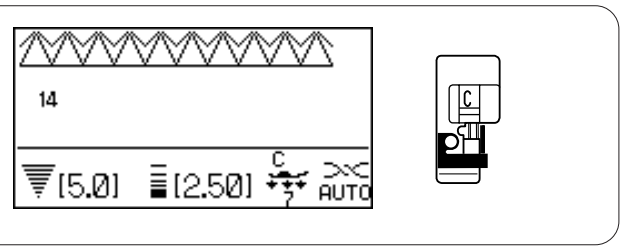

Overcasting stitch

Machine settings

Pattern:	14 (Utility)
Thread tension:	AUTO
Presser foot:	Overcasting foot C
Foot pressure:	7

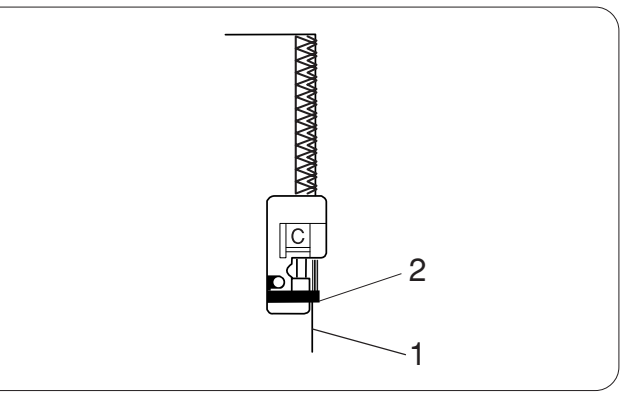

This is an excellent stitch for fabrics that tend to fray extensively such as linens and gabardines.
Two rows of zigzag stitches are simultaneously sewn over the edge to insure that fabric will not ravel.
Place the fabric edge next to the guide of the foot and then sew.

1 Edge of fabric
2 Guide

NOTE:
The stitch width cannot be changed to less than 4.5.

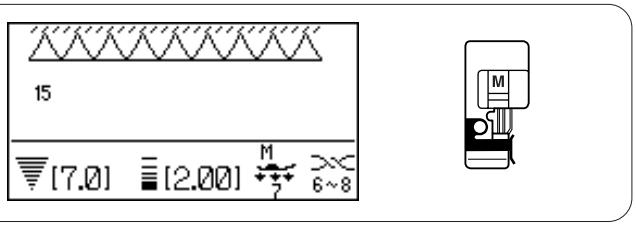

Overcasting stitch

Machine settings

Pattern:	15 (Utility)
Thread tension:	6-8
Presser foot:	Overedge foot M
Foot pressure:	7

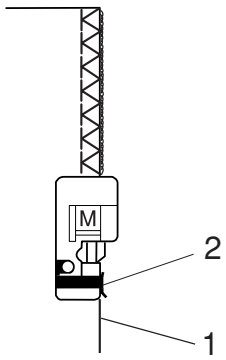

This stitch finishes the edges of fabric similar to a commercial overlocking machine for a professional look.
Place the fabric edge next to the guide of the foot and then sew.

1 Edge of fabric
2 Guide

NOTE:
The stitch width cannot be changed.

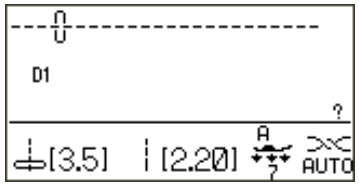

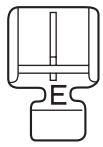

Zipper Sewing

Machine settings

Pattern:	D1 (Utility)
Thread tension:	AUTO
Presser foot:	Zipper foot E
Foot pressure:	7

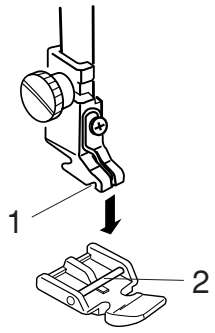

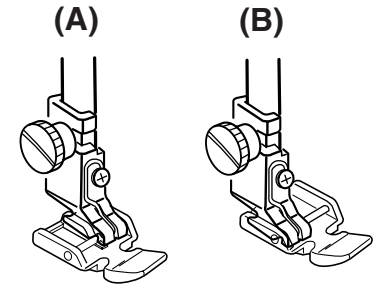

Attaching the zipper foot E

Fit the pin on zipper foot E to the groove on the foot holder.

1 Groove
2 Pin

(A): To sew the left side of the zipper, attach zipper foot with the pin on the right-hand side.

(B): To sew the right side of the zipper, attach the zipper foot with the pin on the left-hand side.

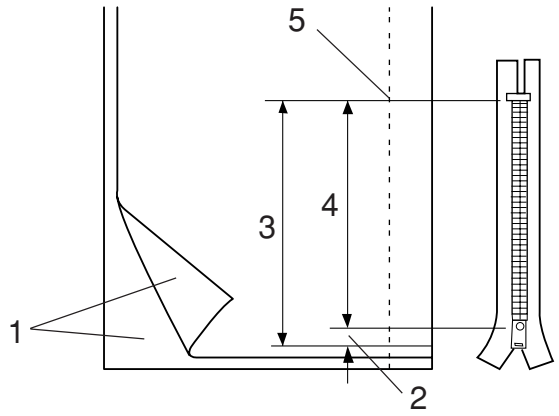

Fabric preparation

Add 1 cm (3/8“) to the zipper size. This is the overall opening size.

1 Right sides of the fabric
2 1 cm (3/8“)
3 Opening size
4 Zipper size
5 End of the zipper opening

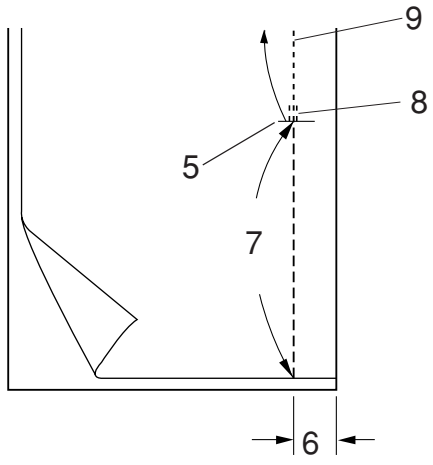

Place the right sides of the fabric together and sew to the end of the opening with a 2 cm (5/8“) seam allowance.
Reverse stitch to lock the seams.
Manually increase the stitch length to 5.0 and baste the zipper opening with the thread tension loosened to 1-3.

5 End of the zipper opening
6 2 cm (5/8“) seam allowance
7 Basting
8 Reverse stitches
9 Seam stitches

Sewing

1

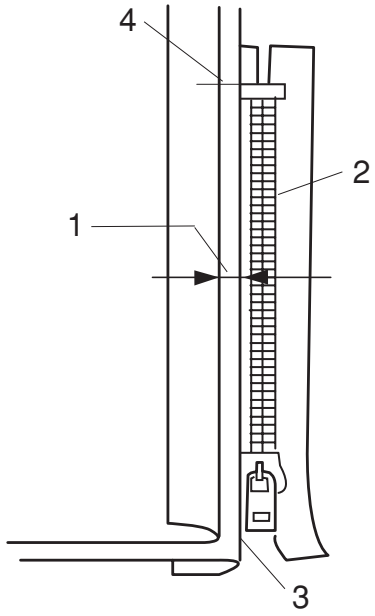

1 Fold back the left seam allowance. Turn the right seam allowance under to form a 0.2 to 0.3 cm (1/8“) margin. Place the zipper teeth next to the fold and pin in place.
Set the stitch length and thread tension back to the original setting.

1 0.2 to 0.3 cm (1/8”) margin
2 Zipper teeth
3 Fold
4 End of the zipper opening

2

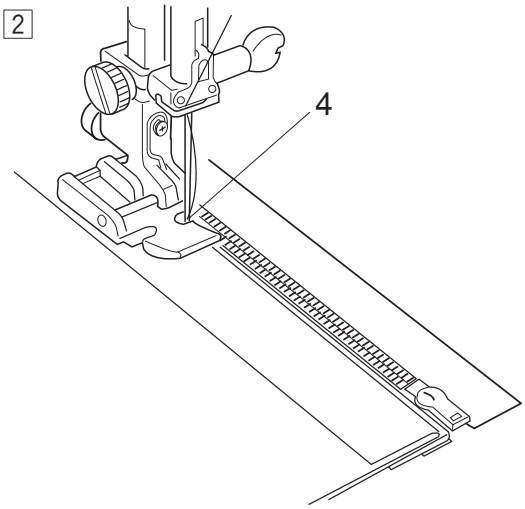

2 Attach zipper foot E with the pin on the right hand side.
Lower the foot onto the topside at the end of the zipper opening so that the needle pierces the fabric next to the fold and the zipper tape.
Sew along the zipper guiding the zipper teeth along the side edge of the foot.

3

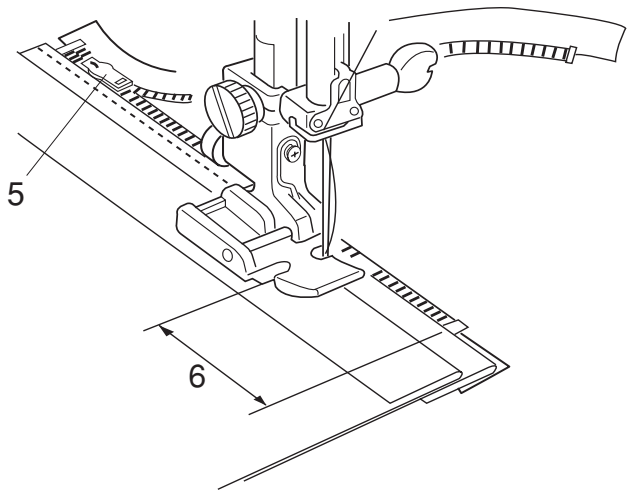

3 Sew through all layers next to the fold.
Stop 5 cm (2”) before zipper foot E reaches the slider on the zipper tape.
Lower the needle slightly into the fabric.
Raise the foot and open the zipper to clear the slider.
Lower the foot and stitch the remainder of the seam.

5 Slider
6 5 cm (2”)

4

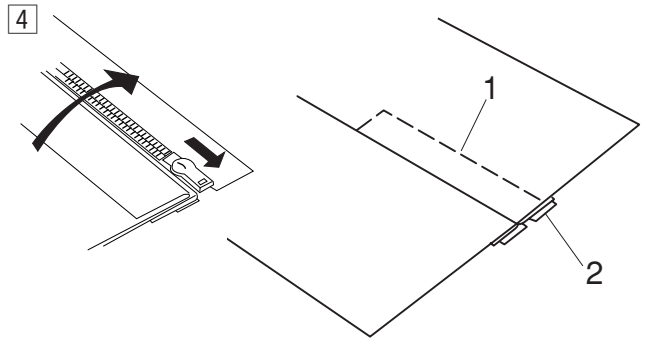

4 Close the zipper and spread the fabric open flat with the right side facing up.
Baste the opened fabric and zipper tape together.

1 Basting
2 Zipper tape

5

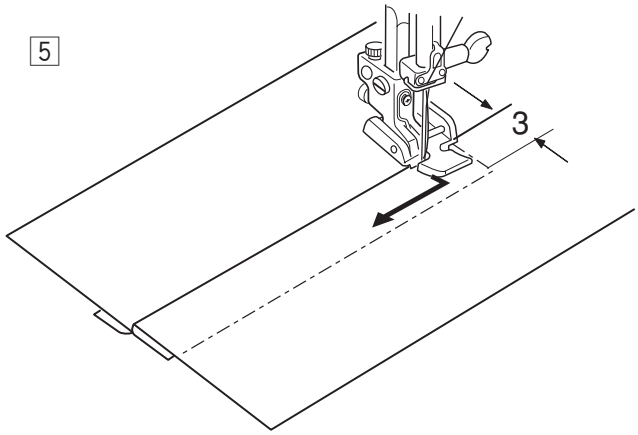

5 Re-attach the zipper foot E with the left pin.
Backstitch across the end of the opening 0.7-1 cm (3/8“) and turn the fabric 90 degrees.

3 0.7-1 cm (3/8“)

6

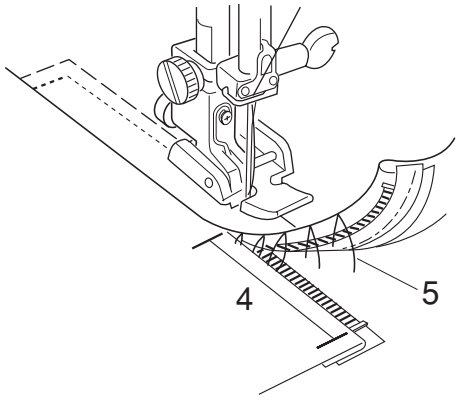

6 Stitch through the garment and zipper tape, guiding the zipper teeth along the side edge of the foot.
Stop about 5 cm (2”) from the top of the zipper.
Unfasten the basting stitches.

4 5 cm (2”)
5 Basting stitches

7

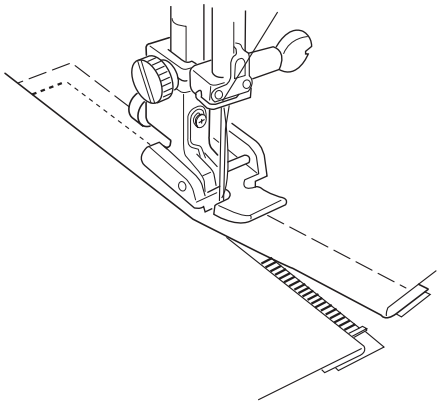

7 Lower the needle into the fabric, raise the foot, and open the zipper.
Lower the foot and stitch the remainder of the seam, making sure the fold is even.
Remove the basting threads after seaming.

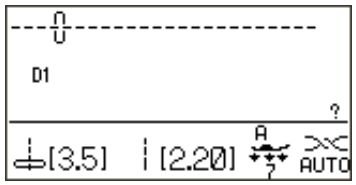



Rolled Hem

Machine settings

Pattern: D1 (Utility)
Thread tension: AUTO
Presser foot: Rolled hem foot D
Foot pressure: 7

Sewing

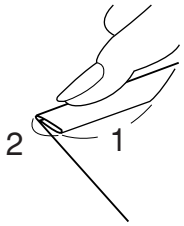

Fold the edge of the fabric twice, 6 cm (2 - 3/8”) in length and 0.3 cm (1/8”) in width.

1 6 cm (2 - 3/8”)
2 0.3 cm (1/8”)

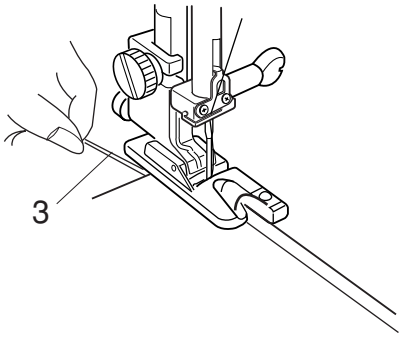

Place the fabric aligning the edge of the hem with the guide on the foot.
Lower the foot and sew 1-2 cm (1/2”-1”) while pulling both thread to the back.

3 Threads

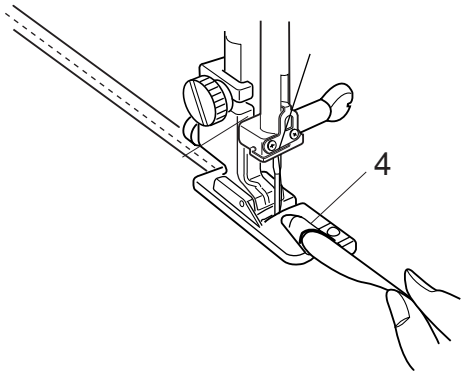

Stop the machine and lower the needle into the fabric.
Raise the foot and insert the folded portion of the fabric into the curl of the foot.
Lower the foot, and then sew by lifting up the edge of the fabric to keep it feeding smoothly and evenly.

4 Curl of the foot

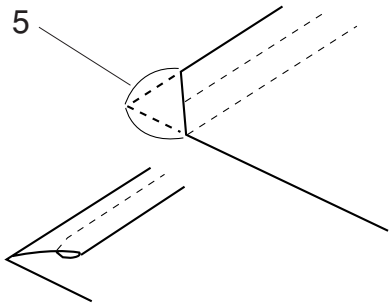

NOTE:
Trim the corner 0.6 cm (1/4”) for easier insertion of the hem into the foot.

5 0.6 cm (1/4”)

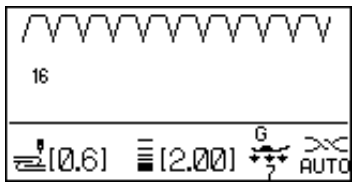

Blind Hemming

Machine settings

Pattern:	16 or 17 (Utility)
Thread tension:	AUTO
Presser foot:	Blind hemming foot G
Foot pressure:	7

Select pattern 16 for woven fabrics or pattern 17 for elastic fabrics.

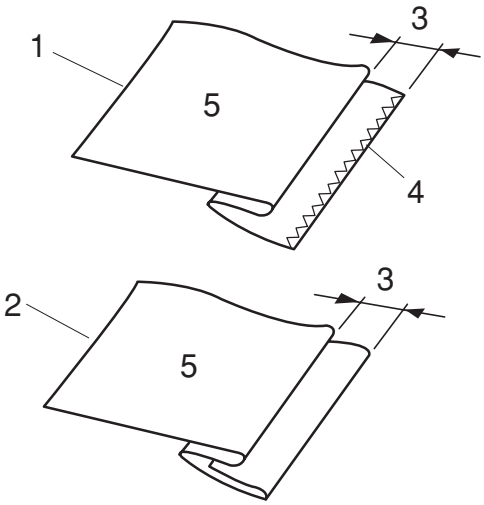

Folding the fabric

Fold the fabric to make a hem as shown.

1 Heavy fabric
2 Fine to medium fabric
3 0.4 -0.7 cm (3/16”-1/4”)
4 Overcasting
5 Wrong side of fabric

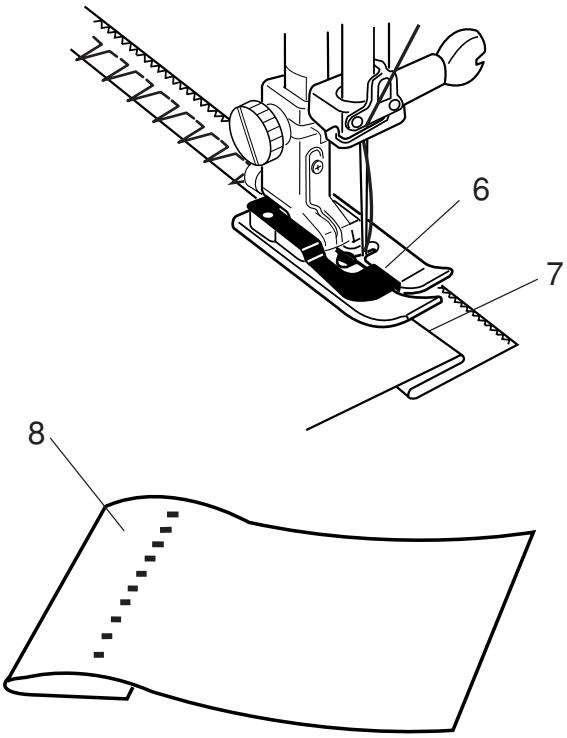

Sewing

Position the fabric so that the fold comes to the left side of the guide on the foot.
Lower the presser foot.
Adjust the position of the needle swing with the stitch width adjusting button so that the needle just pierces the folded edge of the fabric when the needle comes over to the left side.

Sew guiding the fold along the guide.

6 Guide on the foot
7 Fold

Open the fabric with the right side up.
The stitches on the right side of the fabric will be almost invisible.

8 Right side of fabric

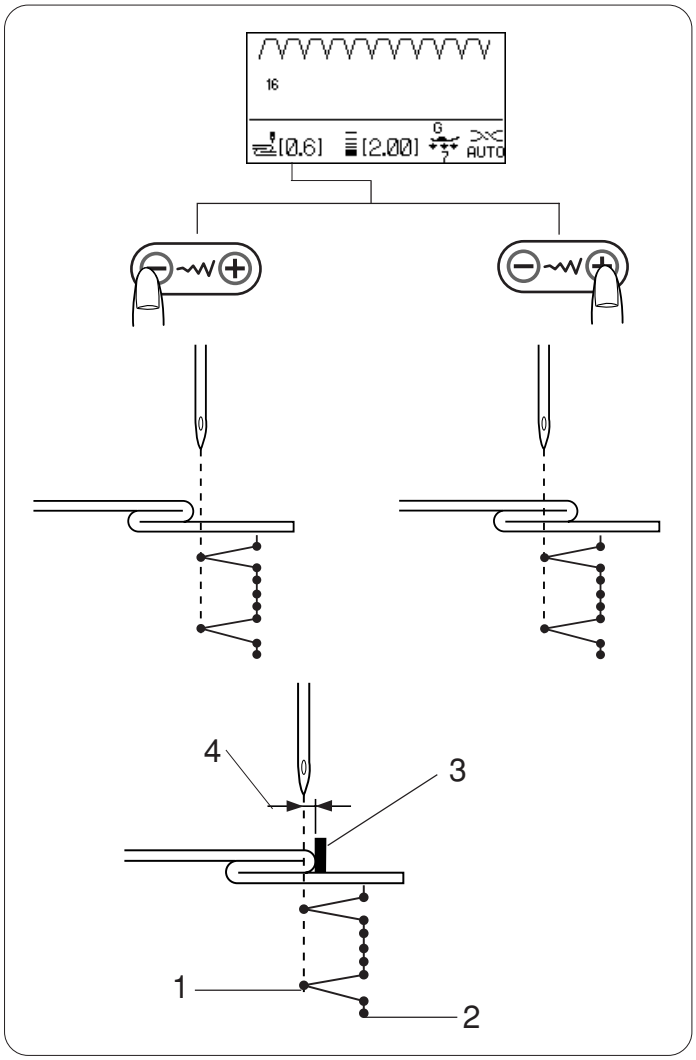

Changing the needle drop position

Press the stitch width adjusting key.
The LCD screen shows the distance between the left needle position and the guide in millimeters.

Press the "–" sign to move the needle to the right.
Press the "+" sign to move the needle to the left.

1 Left needle drop position
2 Right needle drop position
3 Guide on foot
4 Distance between the left needle position and the guide

NOTE:
The stitch width of patterns 16 and 17 cannot be changed, but the needle drop position will move.

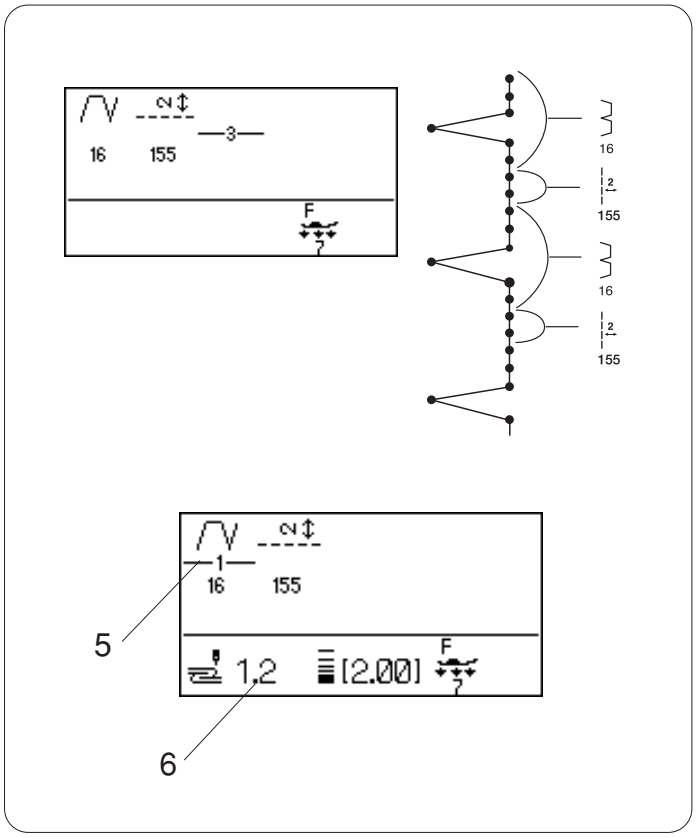

Making the straight stitches in pattern number 16 longer

Program a combination of patterns 16 and pattern 155 or 156.

Two straight stitches will be added to the blind hem stitch when combining with pattern 155.

Four stitches will be added with pattern 156.

NOTE:
To alter the needle drop position of the programmed pattern combination, shift the cursor under pattern 16. Press the stitch width adjusting key to alter the needle drop position.
It is not necessary to adjust the needle drop position of pattern 17 as it will synchronously change.

5 Cursor
6 Needle drop position from the guide

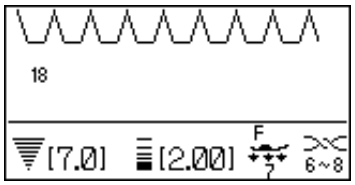



Shell Tuck

Machine settings

Pattern:	18 (Utility)
Thread tension:	6-8
Presser foot:	Satin stitch foot F
Foot pressure:	7

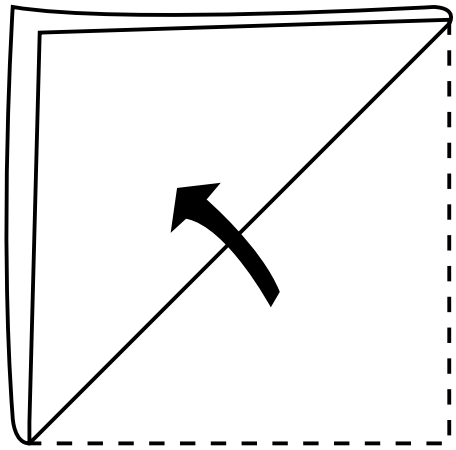

Use a light weight fabric (tricot, for example). Fold the fabric as shown and stitch on the fold.

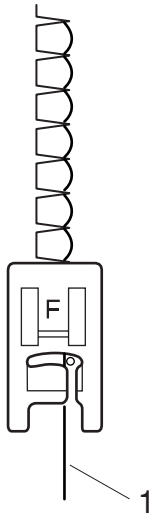

Allow the needle to just clear the folded edge to create a shelled edge. You may need to increase the needle thread tension.

1 Folded edge

If you sew rows of shell stitches, space the rows at least 1.5 cm (5/8˝) apart.
You can also sew shell stitches on knits or soft silky woven fabrics in any direction.

Buttonholes

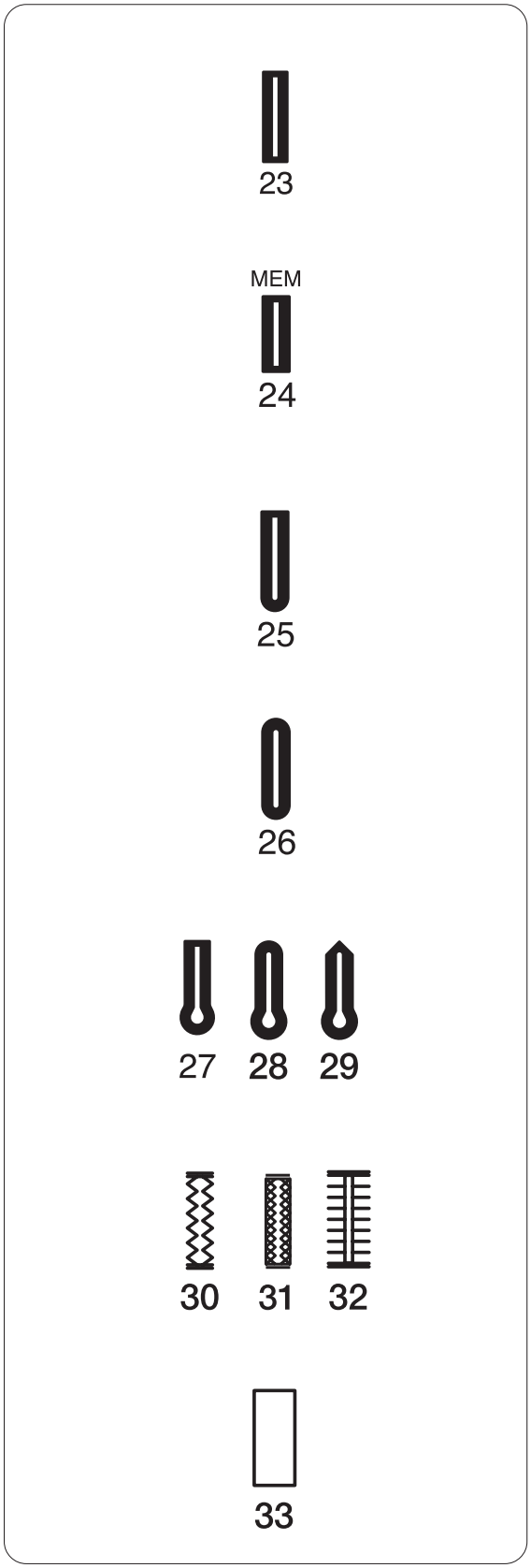

Variety of buttonholes

23 Square (Sensor) buttonhole
This square buttonhole is widely used on medium to heavy weight fabrics.
The buttonhole size is automatically determined by placing a button in the foot.

24 Square (Memory) buttonhole
This is also a square buttonhole similar to the sensor buttonhole, but you can manually set and memorize the buttonhole size to sew buttonholes of the same size.
This buttonhole is useful for bulky fabrics or when sewing on uneven layers.

25 Round end buttonhole
This buttonhole is used on fine to medium weight fabrics especially for blouses and children's clothes.

26 Fine fabric buttonhole
This buttonhole is rounded at both ends and is used on fine, delicate fabrics such as fine silk.

27-29 Keyhole buttonholes
The Keyhole Buttonhole is widely used on medium to heavy weight fabrics. It is also suitable for larger and thicker buttons.

30-32 Stretch buttonholes
This buttonhole can be used on stretch fabrics. It can also be used as a decorative buttonhole.

33 Welted buttonhole
This is a template pattern for the hand sewn welted (bound) buttonhole.

NOTE:
Patterns number 25-33 are sensor buttonholes and the sewing procedure is the same as pattern number 23.

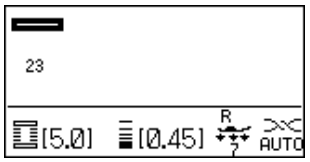

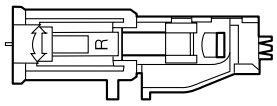

Square (Sensor) buttonholes

Machine settings

Pattern:	23 (Buttonhole)
Thread tension:	AUTO
Presser foot:	Automatic buttonhole foot R
Foot pressure:	7

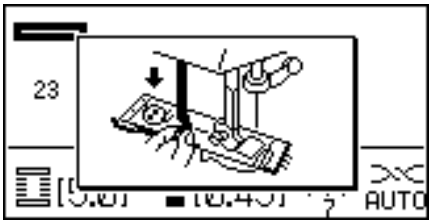

Sensor buttonhole

Patterns number 23 and 25 to 33 are sensor buttonholes. The size of a buttonhole is automatically set by placing a button in the rear of automatic buttonhole foot R.
The button holder of the foot takes a button size of 1 cm (3/8 ”) to 2.5 cm (1”) in diameter.
When selecting the sensor buttonholes, the LCD screen advise you to lower the buttonhole lever.

NOTES:
It is sometimes necessary to change buttonhole size to match certain heavy or specific fabrics and threads.
Make a test buttonhole on an extra piece of the fabric to check your settings.
The preset width of the buttonhole is suited for ordinary buttons.
Apply an interfacing to stretch or fine fabrics.

Sewing

1

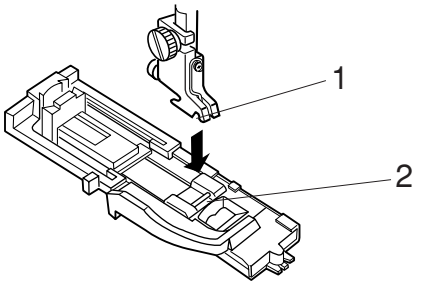

1 Press the needle up/down position button to raise the needle. Attach the automatic buttonhole foot R snapping the pin into the groove of the foot holder. You may lift the presser foot lifter to the extra lifted position when placing the automatic buttonhole foot under the foot holder.

1 Groove
2 Pin

2

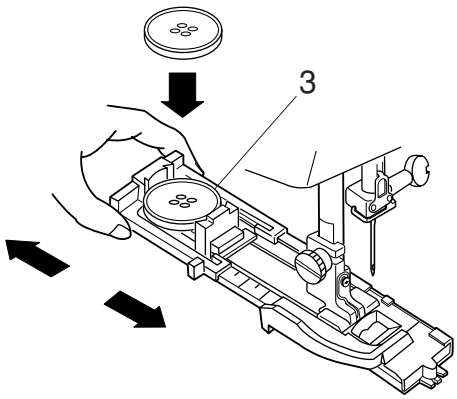

2 Pull the button holder to the back, and place the button in it. Push it together tightly on the button.

3 Button holder

NOTE:
If the button is extremely thick, make a test buttonhole on an extra piece of the fabric.
If it is difficult to fit the button through the test buttonhole, you can lengthen the buttonhole by pulling the button holder back a little. The length of the buttonhole will be increased.

3

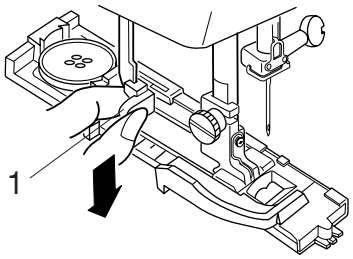

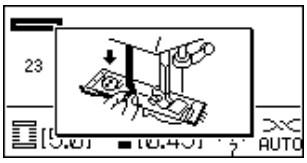

3 Pull the buttonhole lever down as far as it will go.

1 Buttonhole lever

NOTE:
If you start sewing without pulling down the buttonhole lever, the LCD screen will show a warning and the machine will stop after a few stitches. Pull the buttonhole lever down and start sewing.

4

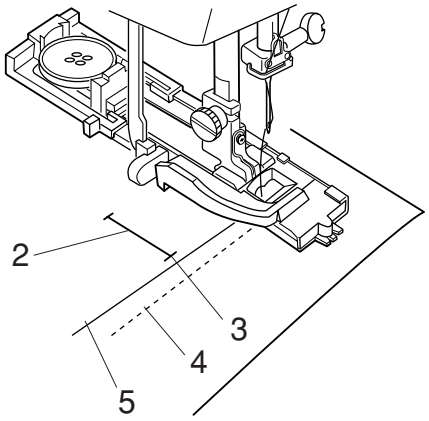

4 Insert the corner of the fabric under the foot. Press the up/down needle position button twice.
Remove the fabric to the left to draw the needle thread through the hole of the foot.
Place the fabric under the foot, and lower the needle at the starting point of the buttonhole mark.
Then lower the foot.

2 Buttonhole mark
3 Starting point
4 Bobbin thread
5 Needle thread

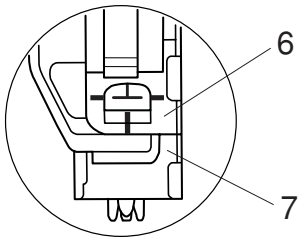

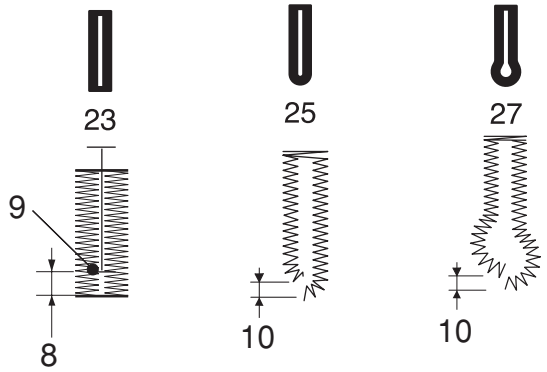

NOTE:
Make sure there is no gap between the slider and the front stopper, otherwise the buttonhole will be off the position or there will be a sewing gap.

6 Slider
7 Front stopper
8 Off the position
9 Starting point
10 Sewing gap

5

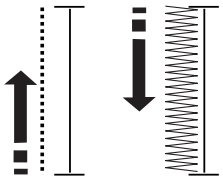

6

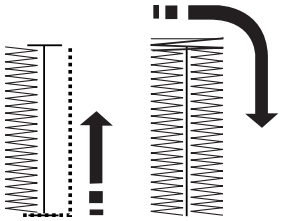

7

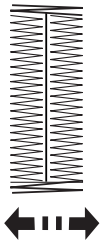

5 Start the machine to sew the buttonhole.
The machine will sew the left row first.

6 Then it goes to the end point with straight stitches.
The machine will sew the back bartack and the right row.

7 Finally, the machine will sew the front bartack and stop automatically.

To sew another buttonhole, press the thread cutter button and raise the presser foot. Move the fabric to where the next buttonhole is to be sewn, then lower the foot and start the machine.

Double layer buttonhole
To make a solid and sturdy buttonhole, sew another layer of buttonhole over the previous stitches.
After the buttonhole is finished, simply start the machine again. Do not raise the foot or buttonhole lever.

8

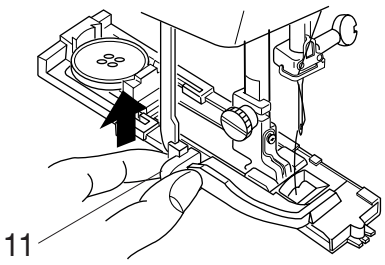

8 When buttonhole sewing is finished, push the buttonhole lever upward as far as it will go.
11 Buttonhole lever

9

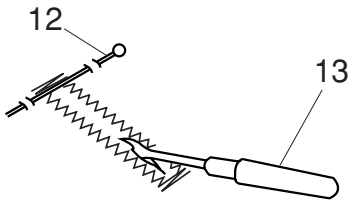

9 Remove the fabric and place a pin just below the bartack at each end to prevent accidentally cutting stitches. Cut the opening with the seam ripper.
12 Pin
13 Seam ripper

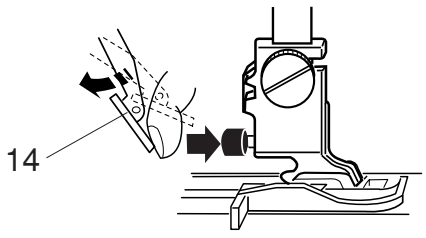

NOTE:
If the dual feed device interferes when pressing the red button, shift the dual feed device away.
14 Dual feed device

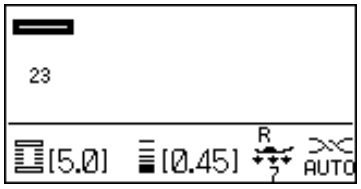

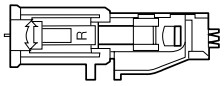

Corded buttonhole

Machine settings

Pattern	23 (Buttonhole)
Thread tension:	AUTO
Presser foot:	Automatic buttonhole foot R
Foot pressure:	7

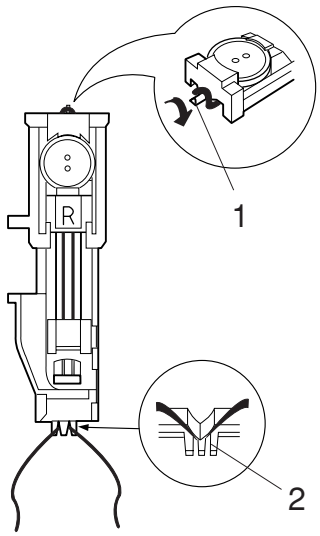

With the automatic buttonhole foot R raised, hook the filler cord on the spur at the back of the buttonhole foot

1 Spur

Bring the ends of the cord toward you under the buttonhole foot clearing the front end.
Hook the ends of the filler cord into the forks on the front of the buttonhole foot to hold them tight.

2 Forks

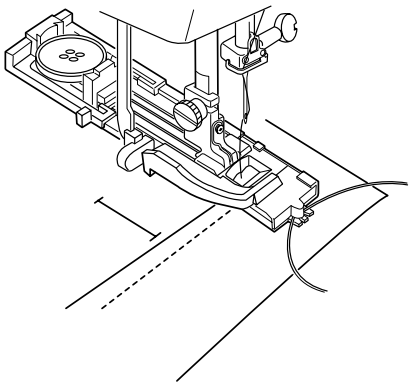

To sew a corded buttonhole, follow the same procedure as a sensor buttonhole.

Lower the needle into the fabric where the buttonhole will start and start sewing.

The sewing procedure is the same as the square (sensor) buttonhole.

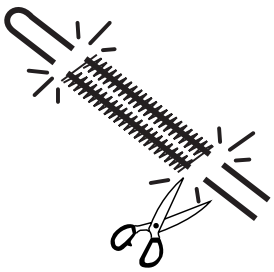

Remove the fabric from the machine.
Cut the filler cord at both ends.

To cut the buttonhole opening, refer to page 53.

NOTE:
Set the stitch width in accordance with the thickness of filler cord used.

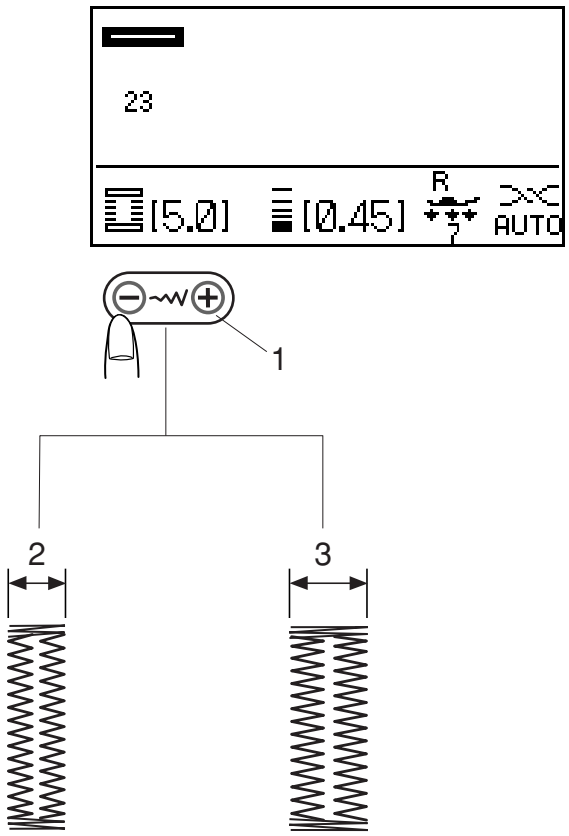

Adjusting the buttonhole width

The buttonhole width can be adjusted by pressing the stitch width adjusting key.

Press the “+“ sign on the stitch width adjusting key to increase the buttonhole width.

Press the “–“ sign on the stitch width adjusting key to decrease the buttonhole width.

1 Stitch width adjusting key
2 Narrower buttonhole
3 Wider buttonhole

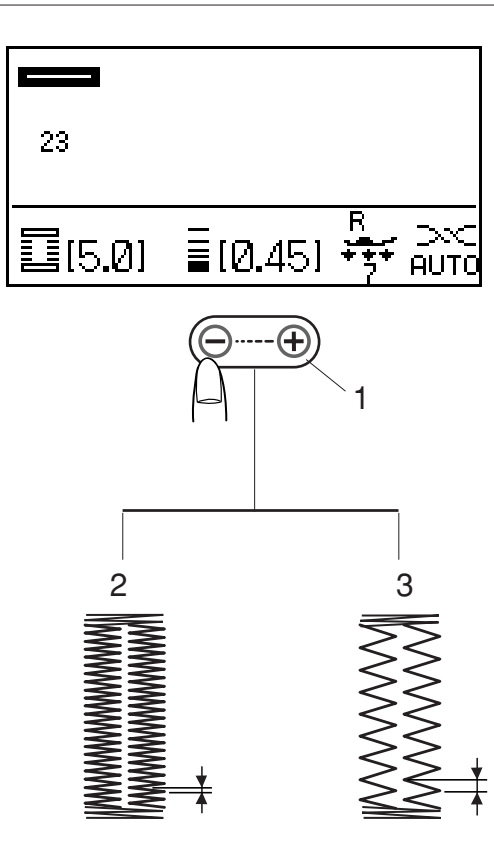

Adjusting the buttonhole stitch density

The buttonhole stitch density can be adjusted by pressing the stitch length adjusting key.

Press the “+“ sign on the stitch length adjusting key to make the buttonhole stitch less dense.

Press the “–“ sign on the stitch length adjusting key to make the buttonhole stitch denser.

1 Stitch length adjusting key
2 Denser buttonhole
3 Less dense buttonhole

NOTES:
To alter the buttonhole width and density while sewing a test buttonhole, stop the machine at the left or right row of the buttonhole then adjust the stitch width and density to find the appropriate settings.
The settings will return to the preset when turning the power switch off or selecting other stitches.

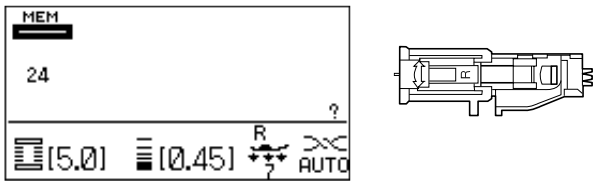

Memory buttonhole

Machine settings

Pattern:	24 (Buttonhole)
Thread tension:	AUTO
Presser foot:	Automatic buttonhole foot R
Foot pressure:	7

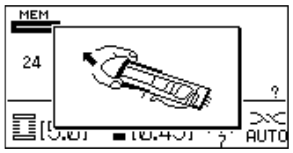

When selecting the memory buttonhole, the LCD screen will advise you to pull the button holder open.

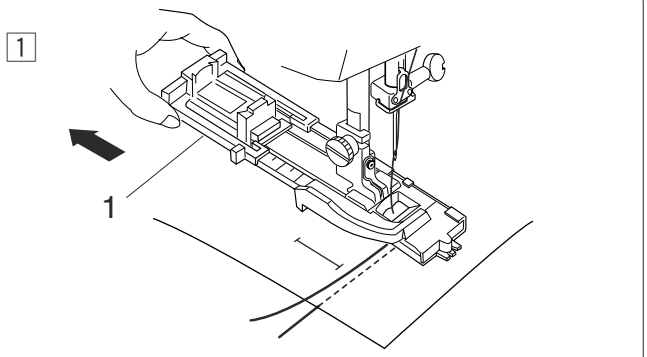

1 Pull the button holder of the buttonhole foot all the way out.
Place the fabric and lower the foot.
1 Button holder

NOTE:
You do not need to pull down the buttonhole lever.

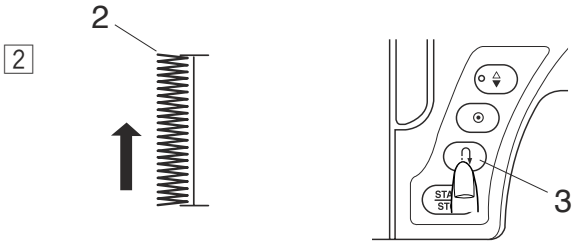

2 Start the machine to sew the left side up to the required length of the buttonhole.
Stop the machine and press the reverse button.
2 Required length
3 Reverse button

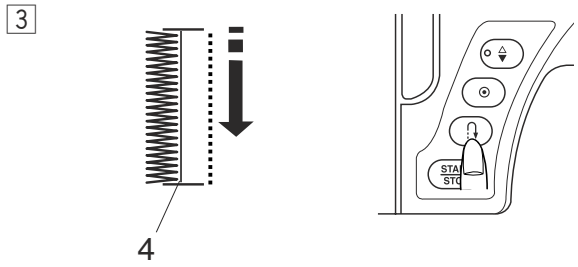

3 Start the machine again.
The machine will sew back to the starting point. Stop the machine when you are directly opposite the starting point. Press the reverse button.
4 Starting point

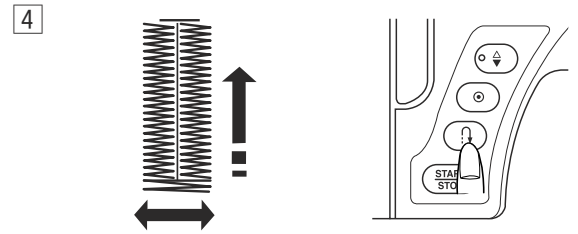

4 Start the machine again.
The machine sews the front bartack and the right side of the buttonhole. Stop the machine when you reach the ending point. Press the reverse button.

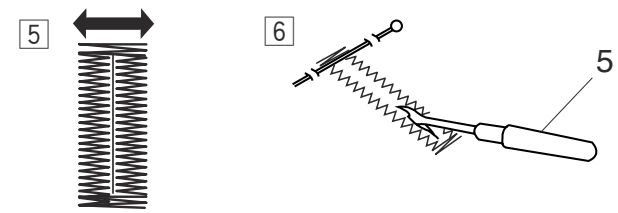

5 Start the machine again.
The machine will sew a back bartack and locking stitches then automatically stop.

To sew the same size buttonhole, reposition the fabric and start the machine.
To sew a buttonhole of a different size, press the memory key [M] to memorize a new size and start sewing from the beginning.

6 Cut the buttonhole opening with the seam ripper.
5 Seam ripper

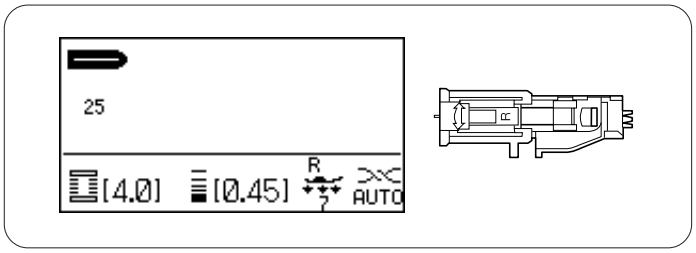

Round end and fine fabric buttonholes

Machine settings

Pattern:	25 or 26 (Buttonhole)
Thread tension:	AUTO
Presser foot:	Automatic buttonhole foot R
Foot pressure:	7

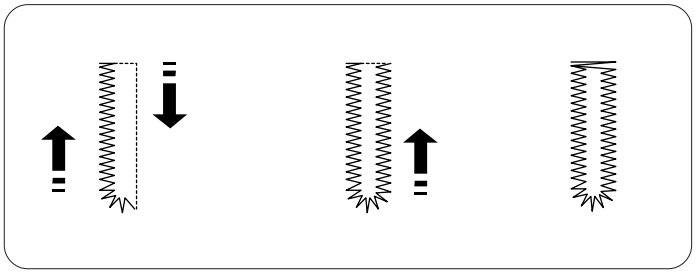

The sewing procedure is the same as the square (sensor) buttonhole (refer to pages 51-53).
The machine will sew a buttonhole in the order shown.

NOTE:
The buttonhole width can be adjusted from 2.5 to 5.5.
The stitch density can be adjusted from 0.30 to 1.00.

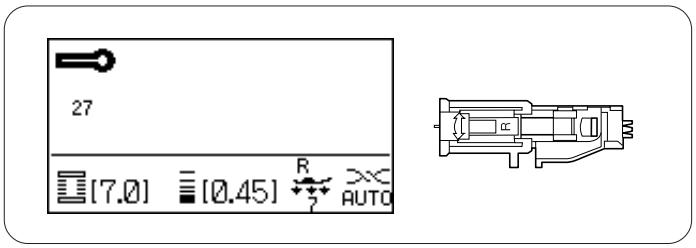

Keyhole buttonholes

Machine settings

Pattern:	27, 28, 29 (Buttonhole)
Thread tension:	AUTO
Presser foot:	Automatic buttonhole foot R
Foot pressure:	7

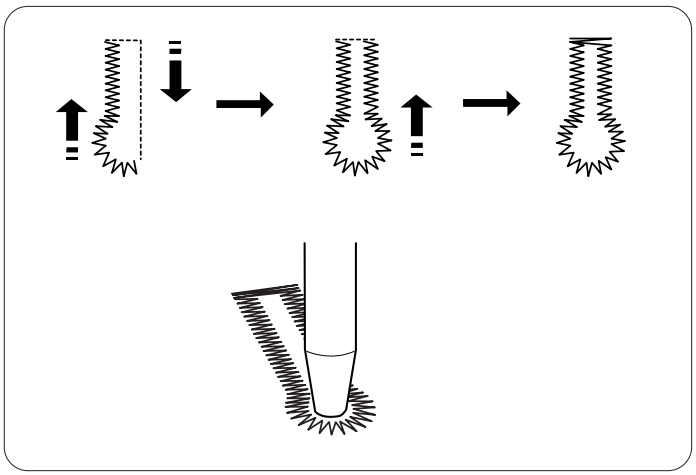

The sewing procedure is the same as the square (sensor) buttonhole (refer to pages 51-53).
The machine will sew a buttonhole in the order shown.

Use an eyelet puncher to open a keyhole buttonhole.

NOTE:
The buttonhole width can be adjusted from 5.5 to 7.0.
The stitch density can be adjusted from 0.30 to 1.00.

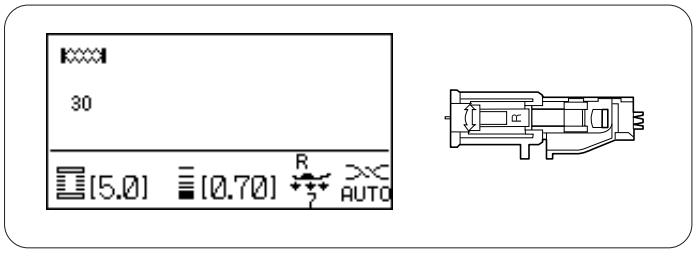

Stretch buttonholes

Machine settings

Pattern:	30 or 32 (Buttonhole)
Thread tension:	AUTO
Presser foot:	Automatic buttonhole foot R
Foot pressure:	7

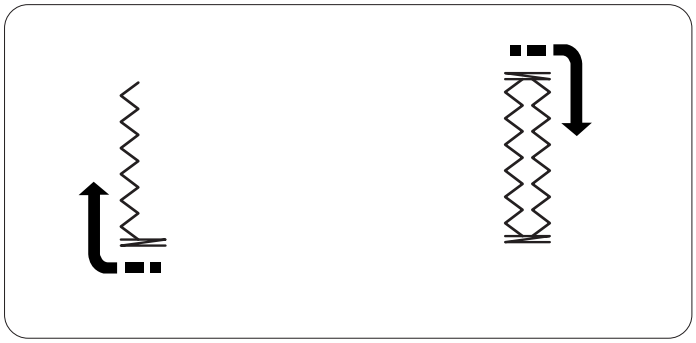

The sewing procedure is the same as the square (sensor) buttonhole (refer to pages 51-53).
The machine will sew a buttonhole in the order shown.

NOTE:
The buttonhole width can be adjusted from 2.5 to 7.0.
The stitch density can be adjusted from 0.50 to 1.00 for pattern 30 and 0.50 to 2.50 for pattern 32.
If the stitch balance of the left and right row is not even, correct it by turning the feed balance dial.

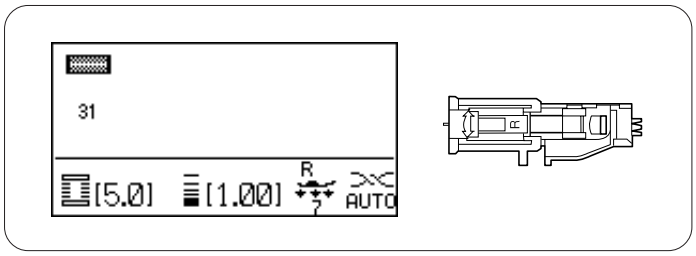

Stretch buttonhole

Machine settings

Pattern:	31 (Buttonhole)
Thread tension:	AUTO
Presser foot:	Automatic buttonhole foot R
Foot pressure:	7

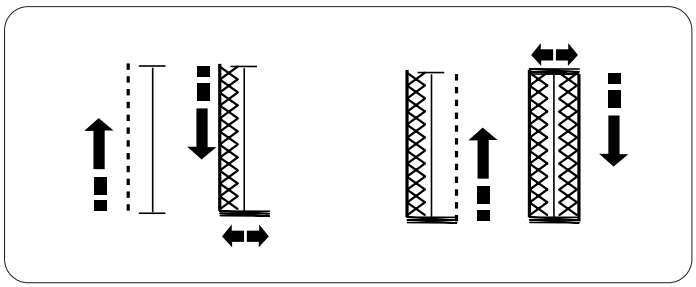

The sewing procedure is the same as the square (sensor) buttonhole (refer to pages 51-53).
The machine will sew a buttonhole in the order shown.

NOTE:
The buttonhole width can be adjusted from 2.5 to 7.0.
The stitch density can be adjusted from 0.70 to 1.20.

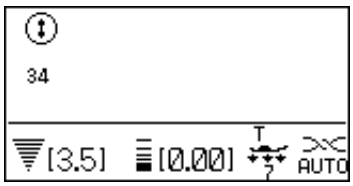



Button Sewing

Machine settings

Pattern:	34 (Buttonhole)
Thread tension:	AUTO
Presser foot:	Button sewing foot T
Foot pressure:	7
Feed dog:	Lowered (refer to page 22.)

WARNING:
Turn the power switch off before changing the presser foot.

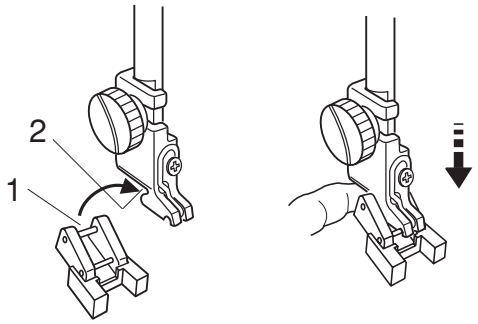

Attaching the button sewing foot T

Insert the rear pin on the foot into the rear groove of the foot holder.

1 Rear pin
2 Rear groove

Gently lower the presser bar while holding the foot with your fingers.

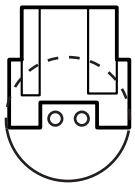

Sewing

Lower the feed dog.
Place a button on the fabric and lower the needle into the left hole of the button by turning the handwheel with your hand.
Lower the foot to hold the button in place, aligning the direction of the button.

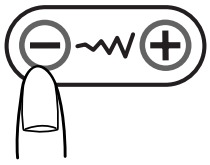

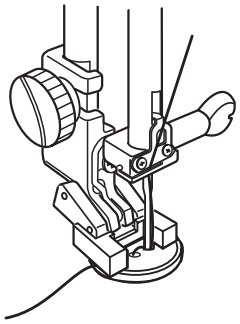

Raise the needle by turning the handwheel until the needle bar swings to the right.
Press the stitch width adjusting key so the needle enters into the right hole of the button.

Start sewing and continue until the machine stops automatically.

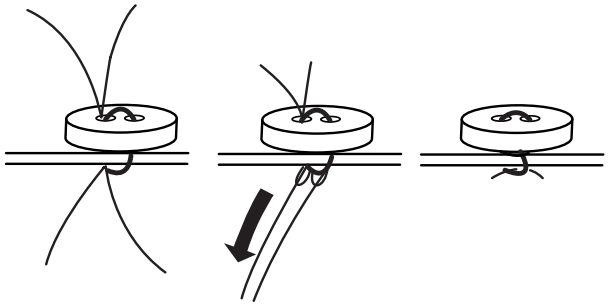

Remove the fabric from the machine.

Pull the bobbin threads to bring the needle threads down to the wrong side of the fabric.
Tie the threads together.

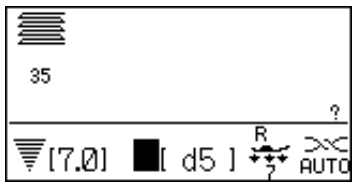

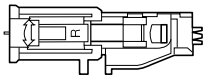

Darning

Machine settings

Pattern:	35 (Buttonhole)
Thread tension:	AUTO
Presser foot:	Automatic buttonhole foot R
Foot pressure:	7

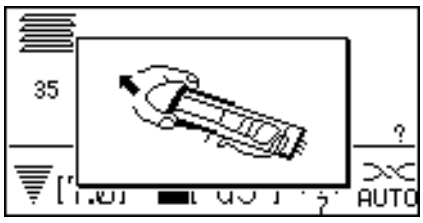

When selecting the darning stitch, the LCD screen will advise you to pull the button holder open.

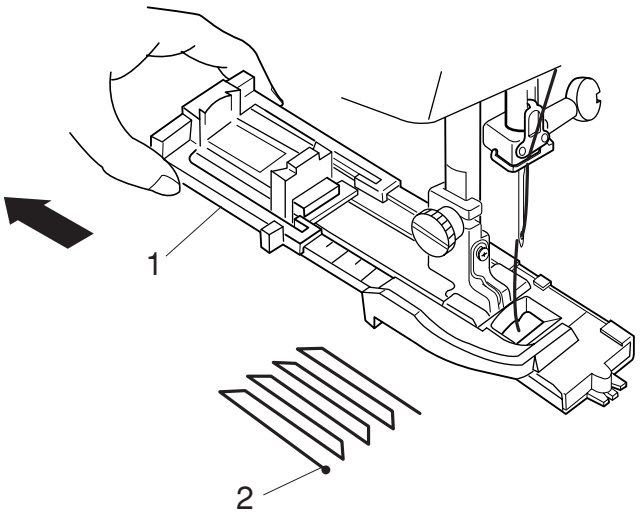

Pull the button holder to the rear.

Insert the corner of the fabric under the foot. Press the up/down needle position button twice.
Remove the fabric to the left to draw the needle thread through the hole of the foot.

Place the fabric under the foot, and lower the needle at the starting point. Then lower the foot.

1 Button holder
2 Starting point

Start sewing. The machine will sew a darning 2 cm (3/4”) long and stop automatically.

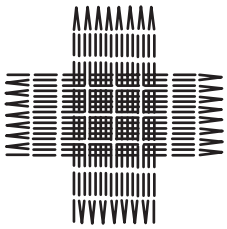

Repeat sewing in the different direction until the darning covers the rip or hole.

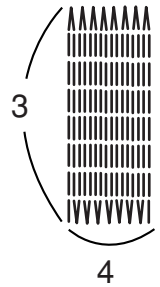

NOTE:
The maximum size of darning is 2 cm (3/4”) long and 0.7 cm (1/4”) wide.

3 Maximum length 2 cm (3/4”)
4 Maximum width 0.7 cm (1/4”)

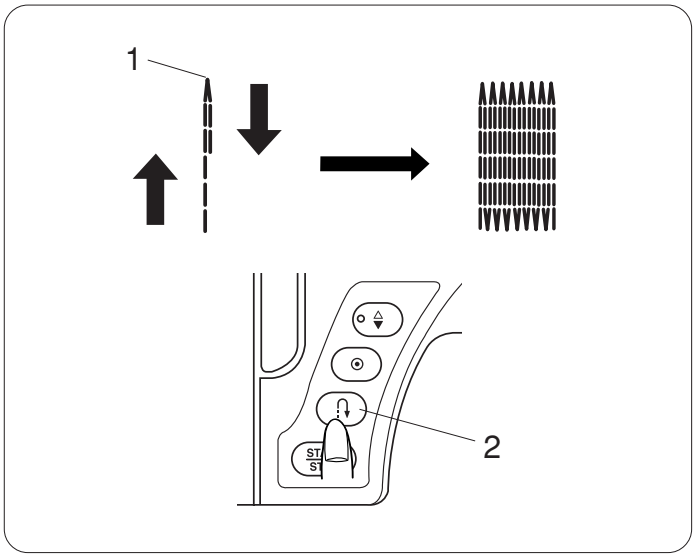

Sewing a shorter darning

To sew a darning shorter than 2 cm (3/4”), first stop the machine after sewing the required length, then press the reverse button.
The required length has been determined.

Start the machine again and continue sewing until the machine stops automatically.

1 Required length
2 Reverse button

Sewing the same size darning

Simply start the machine to sew another darning at the same size.

To sew the darning at a different size

Press the memory key [M] and start sewing from the beginning.

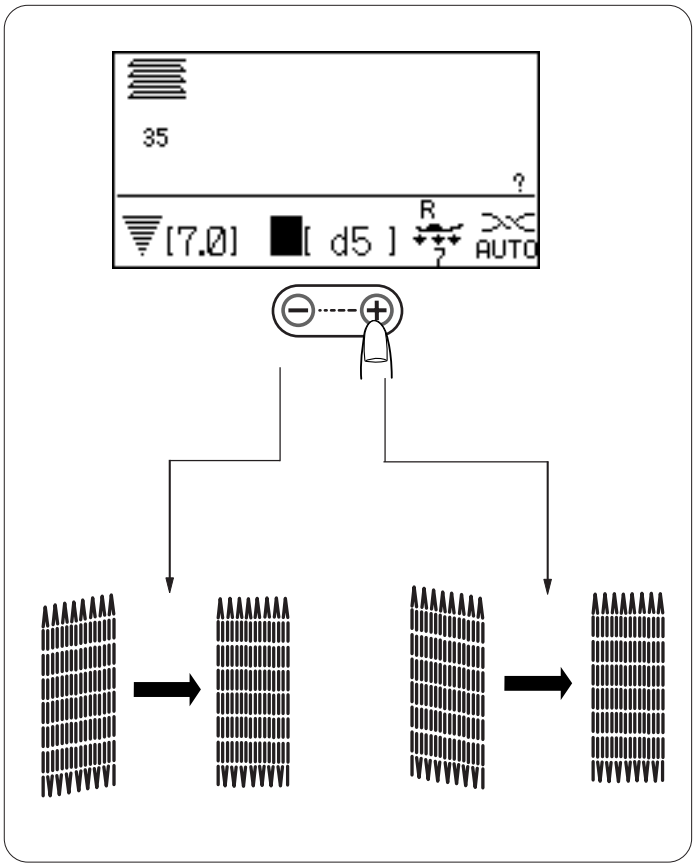

Adjusting the evenness of darning
The evenness of darning may vary depending on the sewing conditions, such as type of fabrics, number of layers etc. You can correct the unevenness of darning with the stitch length adjusting key.

If the left corner is lower than the right side, press on “–“ to correct it.
If the right corner is lower than the left side, press on “+“ to correct it.

NOTE:
The evenness can be adjusted within d1 to d9 (default setting is d5).

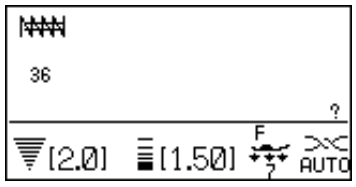

Tacking

Machine settings

Pattern:	36 (Buttonhole)
Thread tension:	AUTO
Presser foot:	Satin stitch foot F
Foot pressure:	7

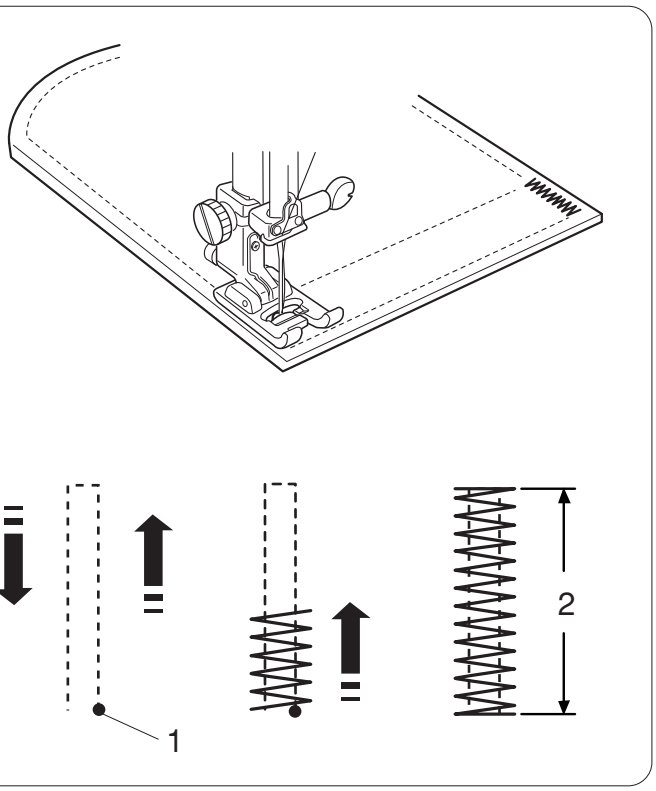

Tacking is used to reinforce pockets, crotch seams and belt carriers where extra strength is needed.

Sewing

Lower the needle at the starting point.
Lower the foot and sew until the machine stops automatically.
The machine will sew a tacking 1.5 cm (9/16”) long automatically.

1 Starting point
2 1.5 cm (9/16”)

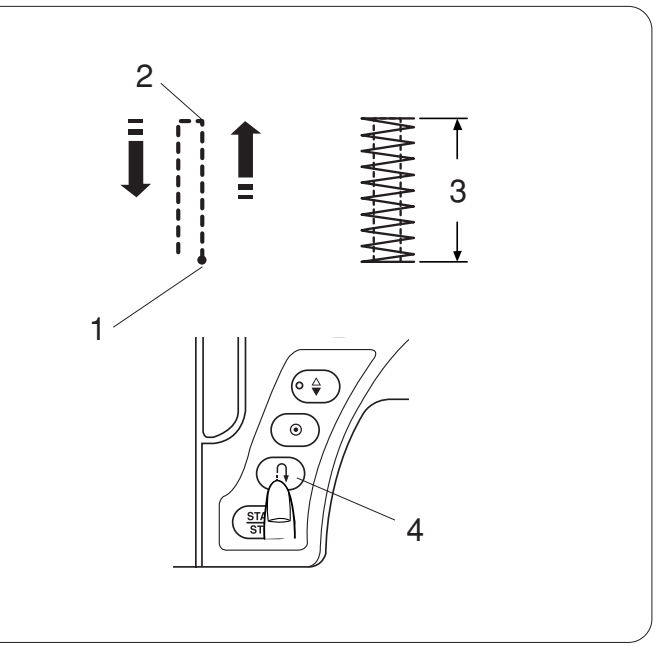

Sewing a shorter tack

To sew a tack shorter than 1.5 cm (9/16”), first stop the machine after sewing the required length, and then press the reverse button.
The required length has been determined.

Start the machine and continue sewing until the machine stops automatically.

1 Starting point
2 Required length
3 Tack length
4 Reverse button

Sewing the same size tack

To sew another tack at the same size, simply start the machine and it will stop automatically when finishing sewing.

Sewing the tack at a different size

To sew the next tack at a different size, press the memory key [M] to memorize a new size and start sewing from the beginning.

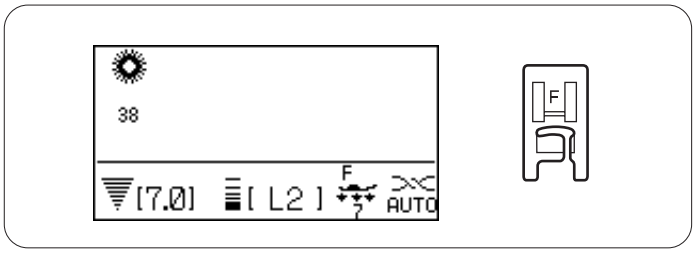

Eyelet

Machine settings

Pattern:	38-40 (Buttonhole)
Thread tension:	AUTO
Presser foot:	Satin stitch foot F
Foot pressure:	7

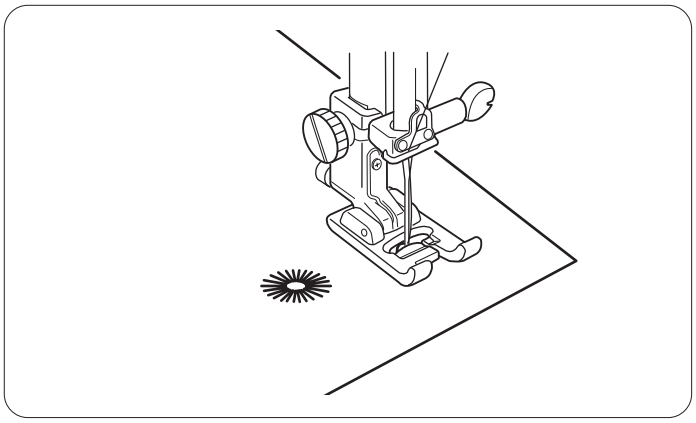

The eyelet is used for belt holes etc.

Sewing

Sew until the machine stops automatically.

Open the eyelet with an eyelet puncher or pointed scissors.

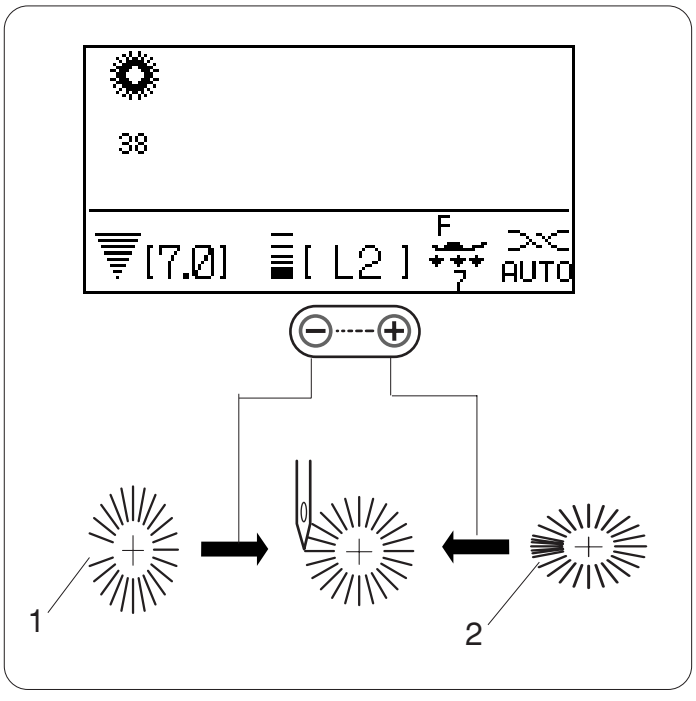

Adjusting the shape of an eyelet

Correct the shape of the eyelet as follows:
If the eyelet gap opens, press “–“ on the stitch length adjusting button.
If the eyelet overlaps, press “+“ on the stitch length adjusting button.

1 Eyelet gap opens
2 Eyelet overlaps

NOTE:
The shape can be adjusted within L1 to L3 (default setting is L2).

PATCHWORK AND QUILTING

Patchwork Piecing

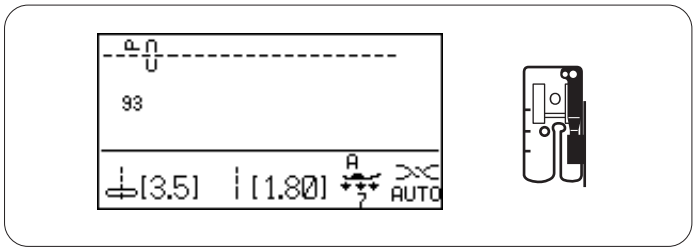

Machine settings

Pattern: 93 (Quilt)
Thread tension: Auto
Presser foot: 1/4” seam foot O
Foot pressure: 7

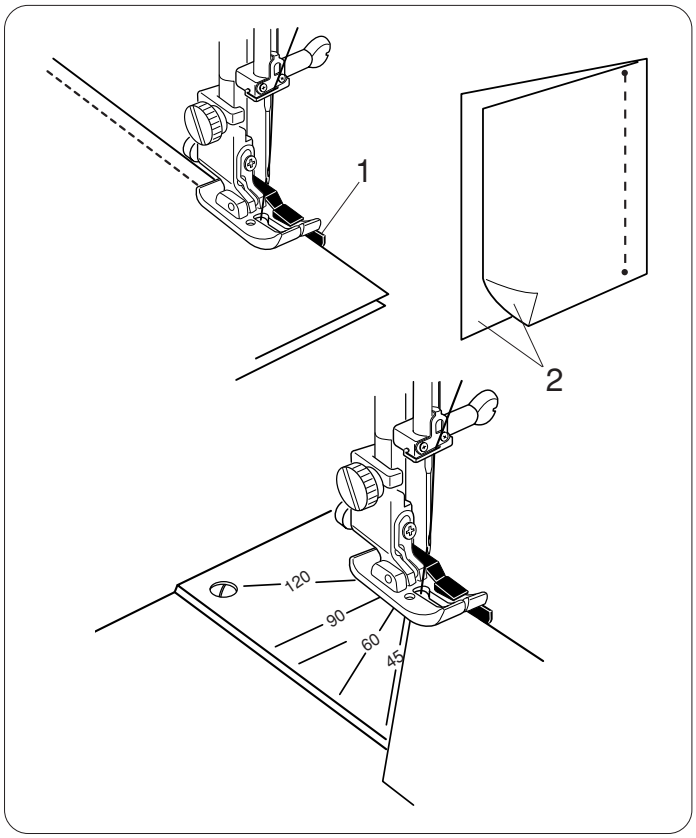

Place the patchwork pieces right sides together. Sew while guiding the edge of the fabric along the guide on the foot to keep a precise 1/4” seam allowance.

1 Guide
2 Right sides of the fabric

Angle scales on the needle plate

You can easily seam patchwork pieces at the desired angle without marking, by using the angle scales on the needle plate.
The angle scales are marked at 45, 60, 90 and 120 degrees.

Patchwork Stitches

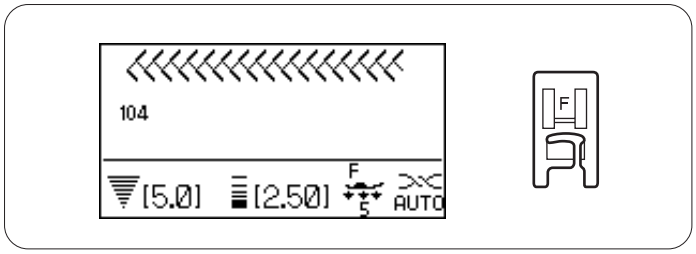

Machine settings

Pattern: 104-111 (Quilt)
Thread tension: Auto
Presser foot: Satin stitch foot F
Foot pressure: 7

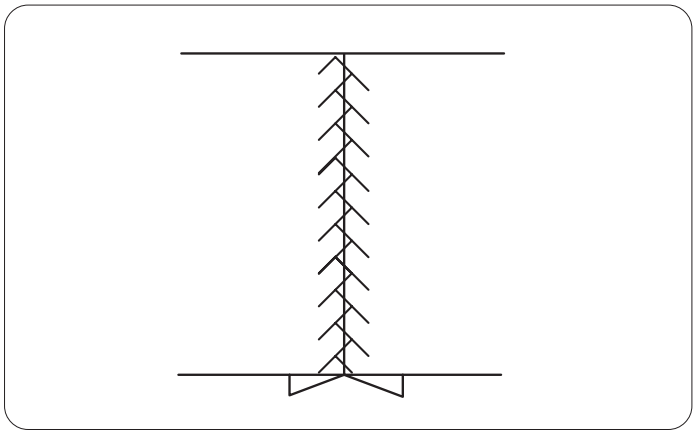

Open the seam flat with the right side up and sew patchwork stitch along the seam line.

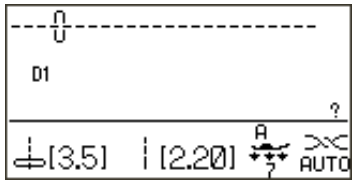

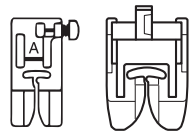

Quilting

Machine settings

Pattern:	D1 (Utility)
Thread tension:	AUTO
Presser foot:	Zigzag foot A or dual feed foot AD
Foot pressure:	7

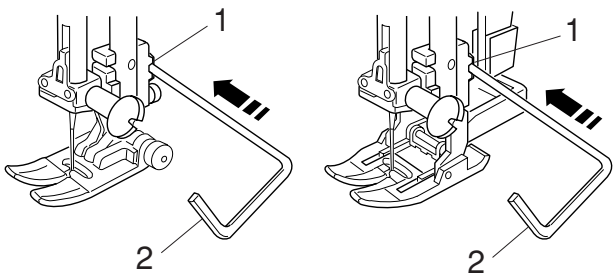

Attaching the quilting bar

Insert the quilting guide bar into the opening and slide the quilting guide bar to the position according to the desired space between seams.

1 Opening on the foot holder
2 Quilting guide bar
3 Space between seams

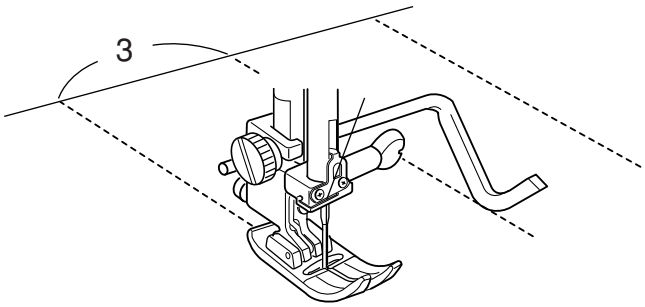

Sewing

Sew while tracing the previous seam with the quilting bar.

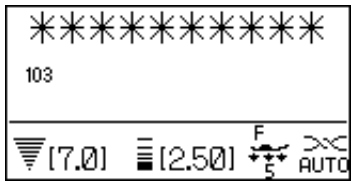



Clasp Stitch

Machine settings

Pattern:	103 (Quilt)
Thread tension:	AUTO
Presser foot:	Satin stitch foot F
Foot pressure:	5

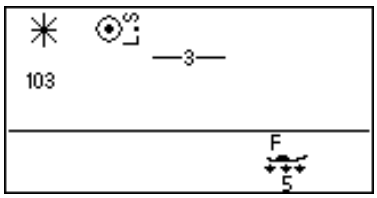

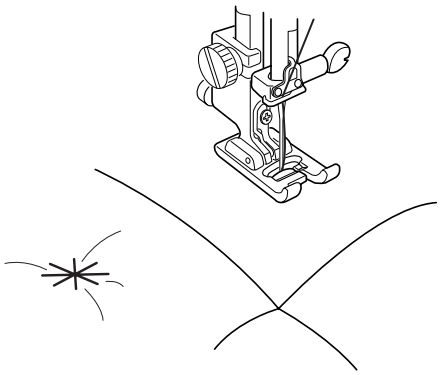

You can secure quilt layers and batting using the clasp stitch.

Select pattern 103 and press the memory key [M].
Press the memory lock key [M⊙].

Lower the presser foot and start sewing. The machine will automatically stop after sewing one unit of the pattern. Raise the presser foot and move the fabric to the next position.

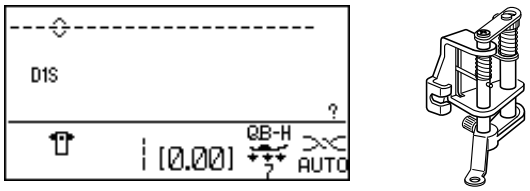

Free Motion Quilting

Machine settings

Pattern:	D1S
Thread tension:	AUTO
Presser foot:	Convertible free motion quilting foot QB-H
Foot pressure:	7
Feed dog:	Lowered (See page 22)

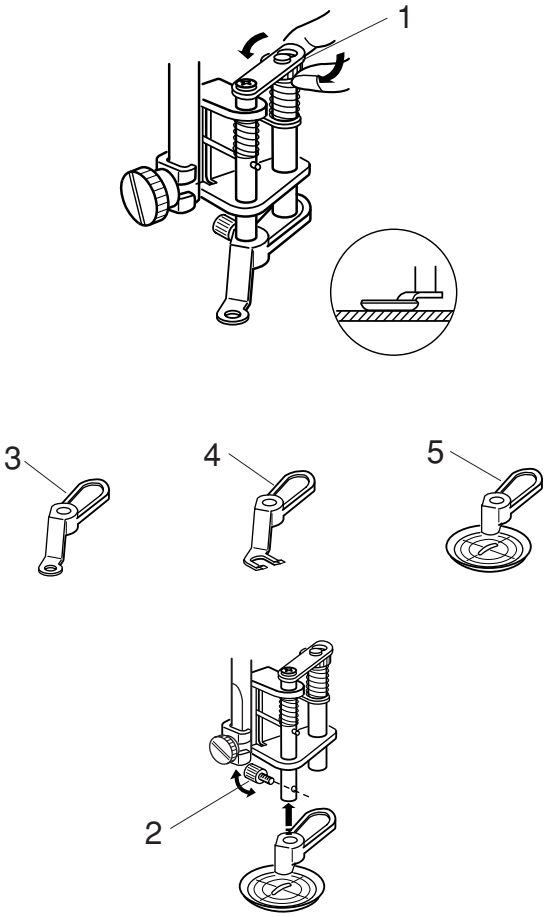

Attaching the convertible free motion quilting foot

Attach the convertible free motion quilting foot and make sure that the needle enters the center of the hole in the foot (refer to page 39).

Adjust the height of the foot by turning the round nut until the bottom of the foot barely touches top of quilt layers.

1 Round nut

Changing the foot

This foot is comes with the closed-toe foot attached, however it is convertible to the open-toe foot and clear view foot.

To change the foot, raise the foot and turn the round nut to bring the foot to the lowest position.

Remove the setscrew and remove the closed-toe foot.

Attach the desired foot and secure it with the setscrew.

Adjust the height of the foot (see above).

2 Setscrew
3 Closed-toe foot
4 Open-toe foot
5 Clear view foot

NOTE:
Only the clear view foot can be used for zigzag stitches.

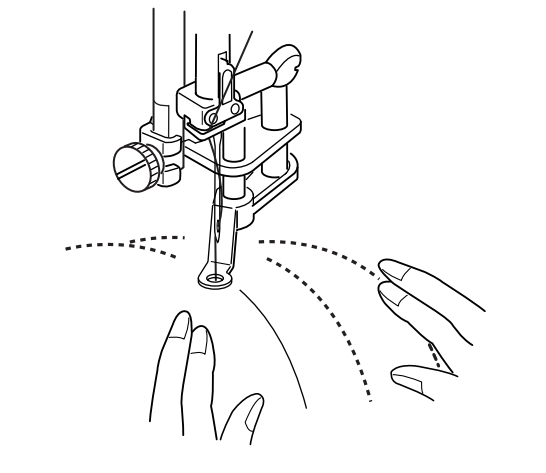

Sewing

Baste or pin the quilt layers. Draw a quilt design on the top fabric with a washable maker.

Sew at medium speed while guiding the quilt layers with your hands.

Move the quilt layers 3 mm (1/8”) or less per stitch.

⚠ CAUTION:
Do not select any pattern other than the straight stitch with center needle position when the closed-toe or open-toe foot is attached.
Do not move the quilt layers toward you when the open-toe foot is attached.

DECORATIVE STITCHES

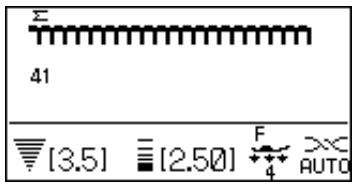



Applique

Machine settings

Pattern:	41-50 (Applique)
Thread tension:	AUTO
Presser foot:	Satin stitch foot F or open toe satin stitch foot F2
Foot pressure:	4

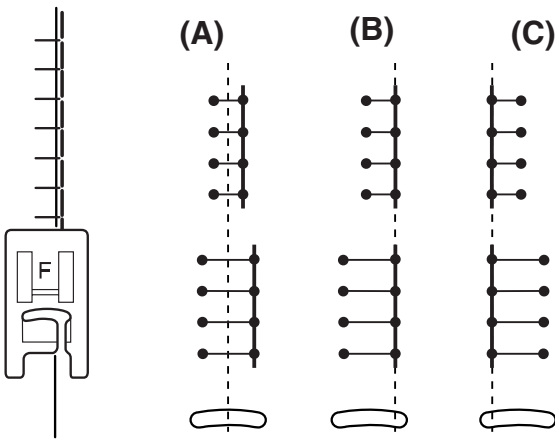

Place an applique on the fabric and baste it in place or use a fusible web to secure the applique in place.
Guide the applique fabric, so that the needle falls off the edge of the applique when the needle swings to the right.

(A): The patterns number 41 to 43 have a fixed center needle drop position.
The stitch width changes symmetrically.

(B): The patterns number 44 to 48 have a fixed right needle drop position. When you change the stitch width, the left needle drop position will change.

(C): The patterns number 49 and 50 have a fixed left needle drop position. When you change the stitch width, the right needle drop position will change.

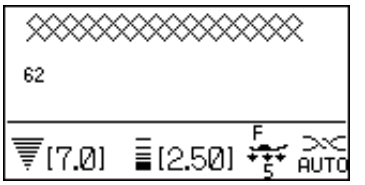



Smocking

Machine settings

Pattern:	55-58, 61-67 (Heirloom)
Thread tension:	AUTO
Presser foot:	Zigzag foot A or satin stitch foot F
Foot pressure:	5

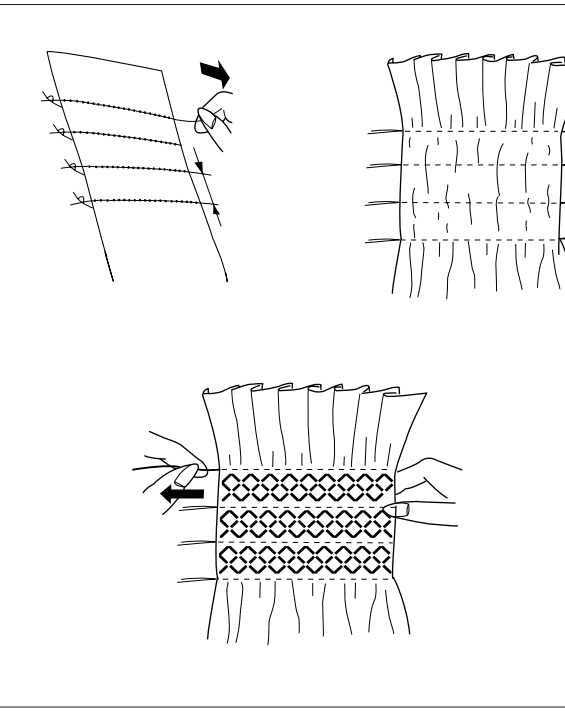

Choose a soft, lightweight fabric such as batiste, gingham or challis. Cut the fabric three times wider than the projected width.

Sew rows of straight stitches, with the stitch length “5.0” and thread tension loosened to “0”, 1 cm (3/8”) apart across the area to be smocked.
Tie the threads along one edge. From the other edge, pull the bobbin threads to distribute the gathers evenly.

NOTE:
Pull up the bobbin thread and draw a 10 cm (4”) thread tail to the back before starting to sew.
Use the thread cutter on the face plate.

Select a smocking stitch and return the thread tension to AUTO.
Sew the smocking stitches between the gathered rows.

Remove the straight stitches between the gathered rows.

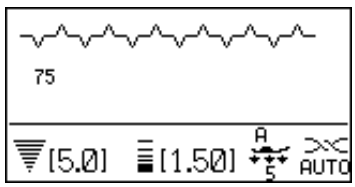

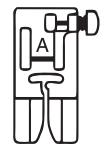

Fagoting

Machine settings

Pattern:	66, 67, 75 (Heirloom)
Thread tension:	AUTO
Presser foot:	Zigzag foot A
Foot pressure:	5

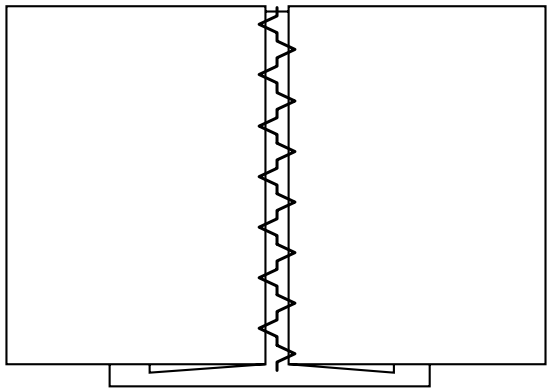

Use this stitch to join two pieces of fabric to create an open work appearance and add design interest.

Fold under each fabric edge 1.5 cm (5/8˝) and press. Pin the two edges to paper or tear away backing 0.3 cm (1/8˝) apart.
Sew slowly, guiding the fabric so the needle catches the folded edge on each side.

After finishing sewing, tear away the paper.

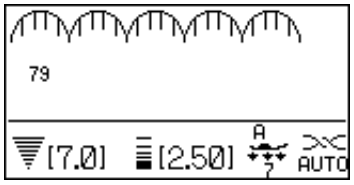



Scallop

Machine settings

Pattern:	79 (Heirloom)
Thread tension:	AUTO
Presser foot:	Zigzag foot A
Foot pressure:	7

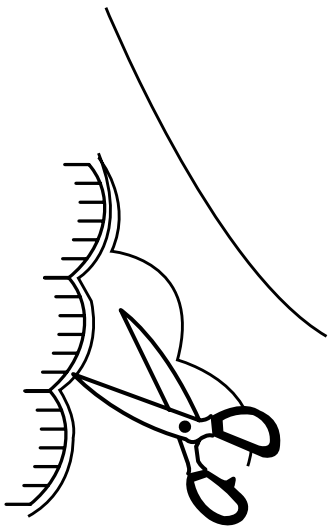

Sew scallops 1 cm (3/8”) from the fabric edge.

Trim the allowance close to the stitches.
Make sure not to cut the stitches.

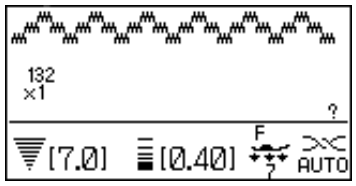



Cording (3-strand cording)

Machine settings

Pattern:	132 (Satin)
Thread tension:	AUTO
Presser foot:	Cording foot H
Foot pressure:	7

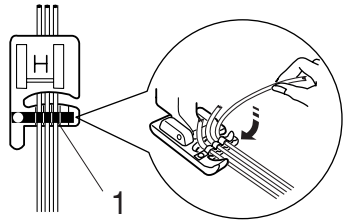

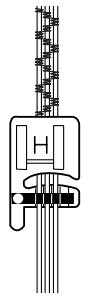

Insert 3 strands of cording under the spring of the foot and draw them under the foot to the rear.

1 Spring

Hold the three strands parallel for even sewing and be sure to sew over the strands

Stitch slowly and smoothly, guiding the fabric as you sew.

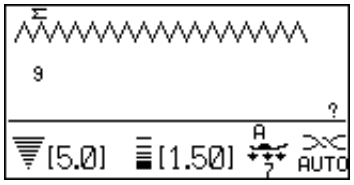



Cording (1-strand cording)

Machine settings

Pattern:	9 (Utility)
Thread tension:	AUTO
Presser foot:	Cording foot H
Foot pressure:	7



Insert one strand of cording under the spring of the foot and draw it under the foot to the rear (use the center slot of the spring).

Select pattern 9 (Utility), then decrease the stitch width and sew.

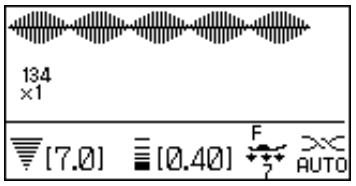

Satin Stitches

Machine settings

Pattern: 131-150 (Satin)
Thread tension: AUTO
Presser foot: Satin stitch foot F
Foot pressure: 7

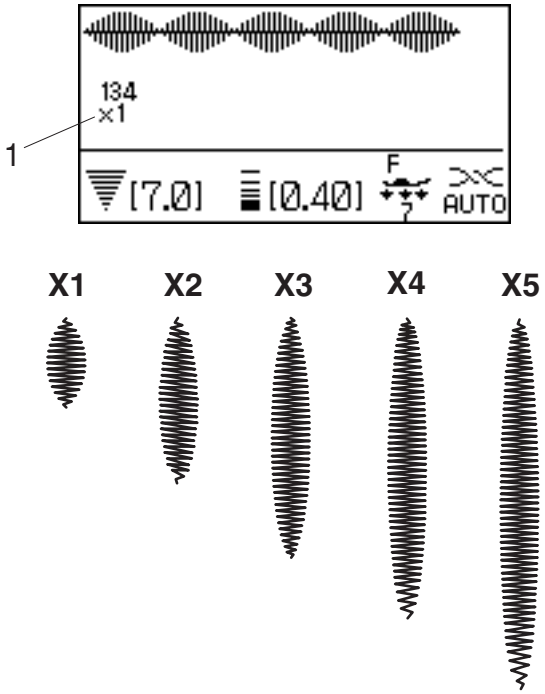

The stitches in this group can be elongated up to 5 times their original length while the stitch density remains the same.

Example: Pattern number 134

Select pattern number 134.

Press the elongation key [E] to select the desired elongation ratio.
Elongation ratio is indicated in multiples of the original pattern length; **X1** (original length) to **X5**.

1 Elongation ratio

The stitch length and width can also be changed.



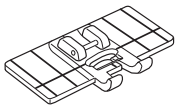

Sewing Border Designs with the Border Guide Foot

Machine settings

Pattern: See example below
Thread tension: AUTO
Presser foot: Border guide foot
Foot pressure: 7

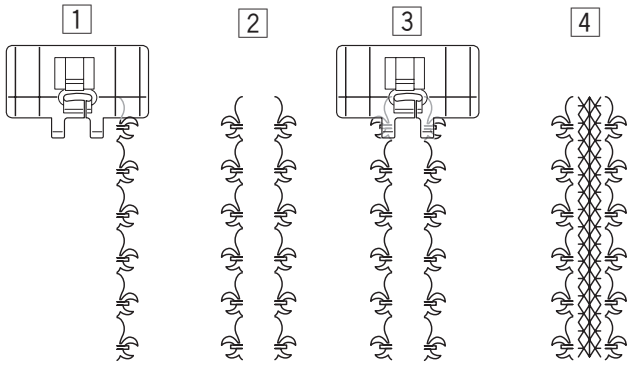

Example: Patterns number 249, 61,250

Attach the border guide foot

1 Select pattern 250 and sew a line of the pattern. Position the fabric so that the line of pattern 250 fits between the right guides of the foot.

2 Select pattern 249 and sew a line of the pattern.

3 Position the fabric so that the 2 lines of patterns fit between the inner guides of the foot.

4 Select pattern 61 and sew a line of the pattern.

Sewing a Mirror Image of a Pattern

To sew a mirror image of a stitch pattern, press the locking stitch key after memorizing the desired pattern.

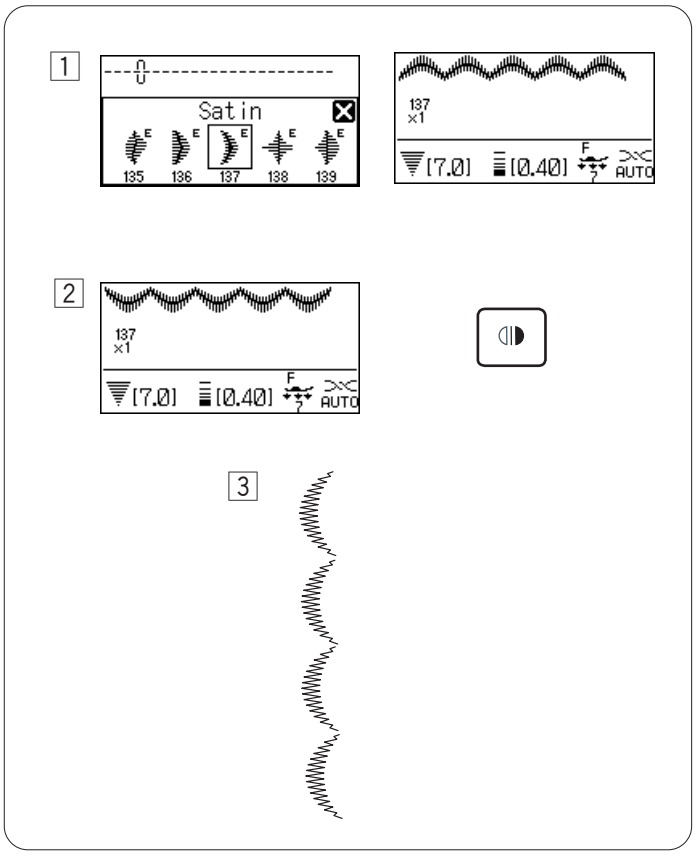

1 Select the desired pattern.

2 Press the mirror image key.

3 The mirror image of the pattern will be sewn continuously.

Sewing a Single Unit of a Pattern

To sew only a single unit of a stitch pattern, press the locking stitch key after memorizing the desired pattern.

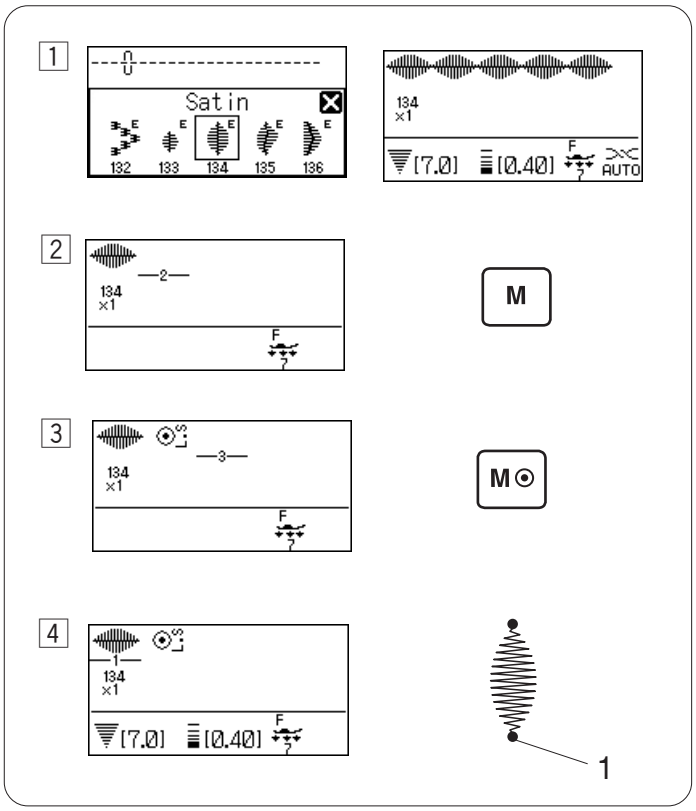

1 Select the desired pattern.

2 Press the memory key.

3 Press the locking stitch key.

NOTE:
No further patterns can be memorized after pressing the locking stitch key.

4 Start sewing.
The machine will lock the stitch and sew single unit of the pattern, then stop automatically after locking off the stitch.

1 Locking stitch

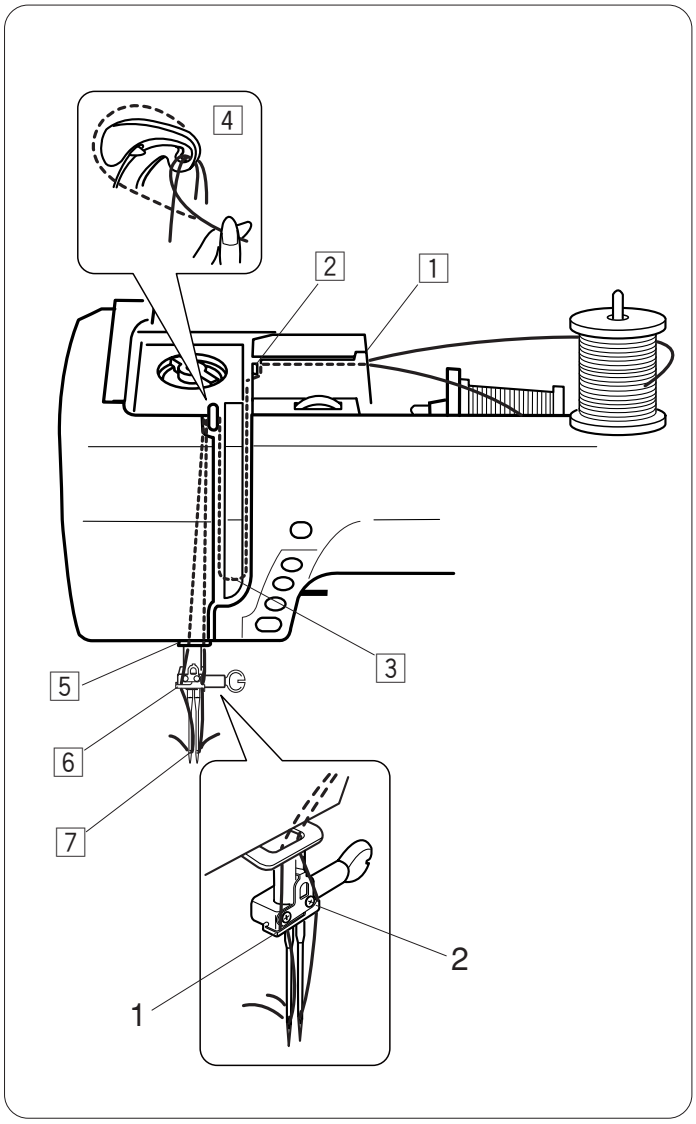

Twin Needle Sewing

CAUTION:
Turn off the machine before changing the needle and threading the machine.
When sewing with the twin needle, press the twin needle key .

NOTES:
Use the zigzag foot A or satin stitch foot F.
Use #60 or finer threads.
Test the stitches before you begin to sew.

Threading the machine for twin needle
Raise the needle to the highest position and raise the presser foot.

Attach the extra spool pin (refer to page 14).
Draw both threads from the spools and pass them through the points from 1 to 7.
Make sure that the two strands of thread do not get tangled.

Pass one of the threads through the needle bar thread guide on the left, and the other on the right.

1 Needle bar thread guide (left)
2 Needle bar thread guide (right)

Thread the needles from the front to back by hand.

NOTES:
Threading of points 1 to 5 is the same as for single needle.
The needle threader cannot be used for the twin needle.

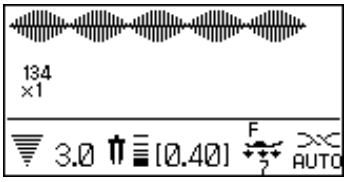



Machine Setting

Pattern:	See below
Thread tension:	AUTO
Presser foot:	Zigzag foot A or satin stitch foot F
Foot pressure:	7

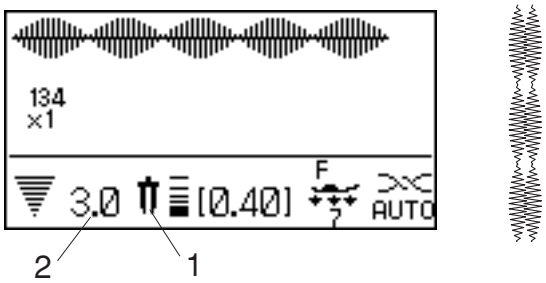

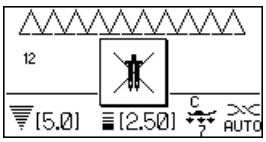

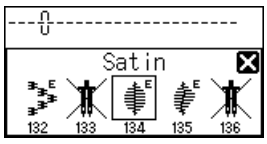

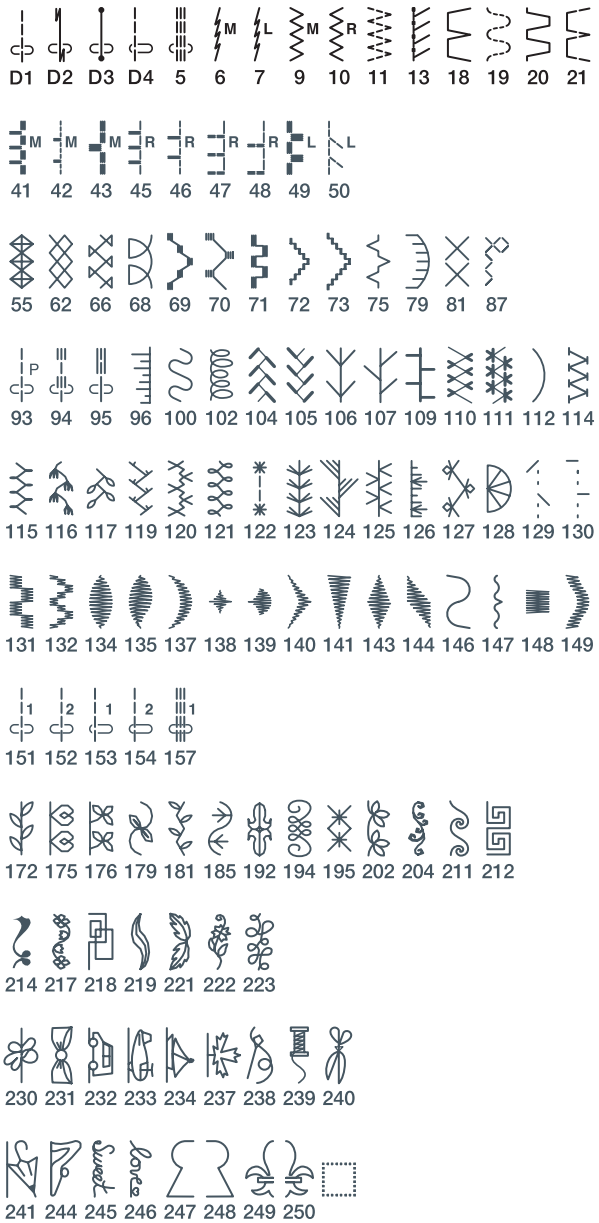

Selecting the patterns

Select the desired pattern suitable for twin needle sewing.

Press the twin needle key .

The LCD screen shows a twin needle icon and the maximum permissible stitch width is restricted to 3.0 mm. The needle drop position of straight stitches is restricted to between 2.0 and 5.0.

1 Twin needle icon
2 Maximum width (3.0)

NOTES:

If you press the twin needle key, a warning message will appear when a pattern not suitable for twin needle sewing is selected.

After pressing the twin needle key, patterns not suitable for twin needle sewing cannot be selected and the mark is shown instead of the pattern icon.

Patterns cannot be programmed if the twin needle key has been pressed.

Sewing

Sew at a medium speed.

When changing the sewing direction, raise the needle from the fabric.

PROGRAMMING A PATTERN COMBINATION

Pattern Combination

Example: Programming patterns 134 and 138.

NOTE:
Patterns in the different groups, letters and numbers can also be programmed.

1 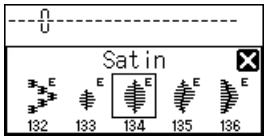

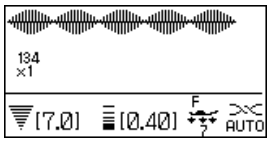

Select pattern 134 (Satin).

2 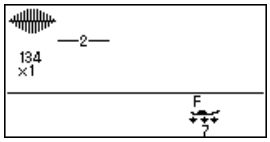



Press the memory key.

3 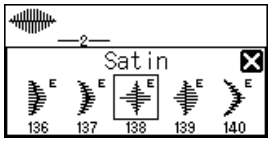

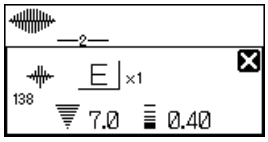

Select pattern 138 (Satin).

4 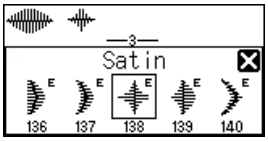



Press the memory key or confirm button.

5 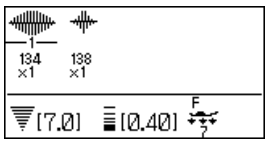

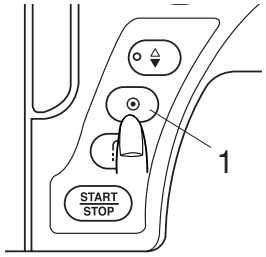



Combination of patterns 134 and 138 will be sewn continuously.

NOTE:
If you press the auto-lock button in the middle of sewing, the machine will sew to the end of the current pattern, sew locking stitches and stop automatically.

1 Auto-lock button

Pattern Combination with a Mirror Image

Example: Pattern 137 (Satin) and its mirror image

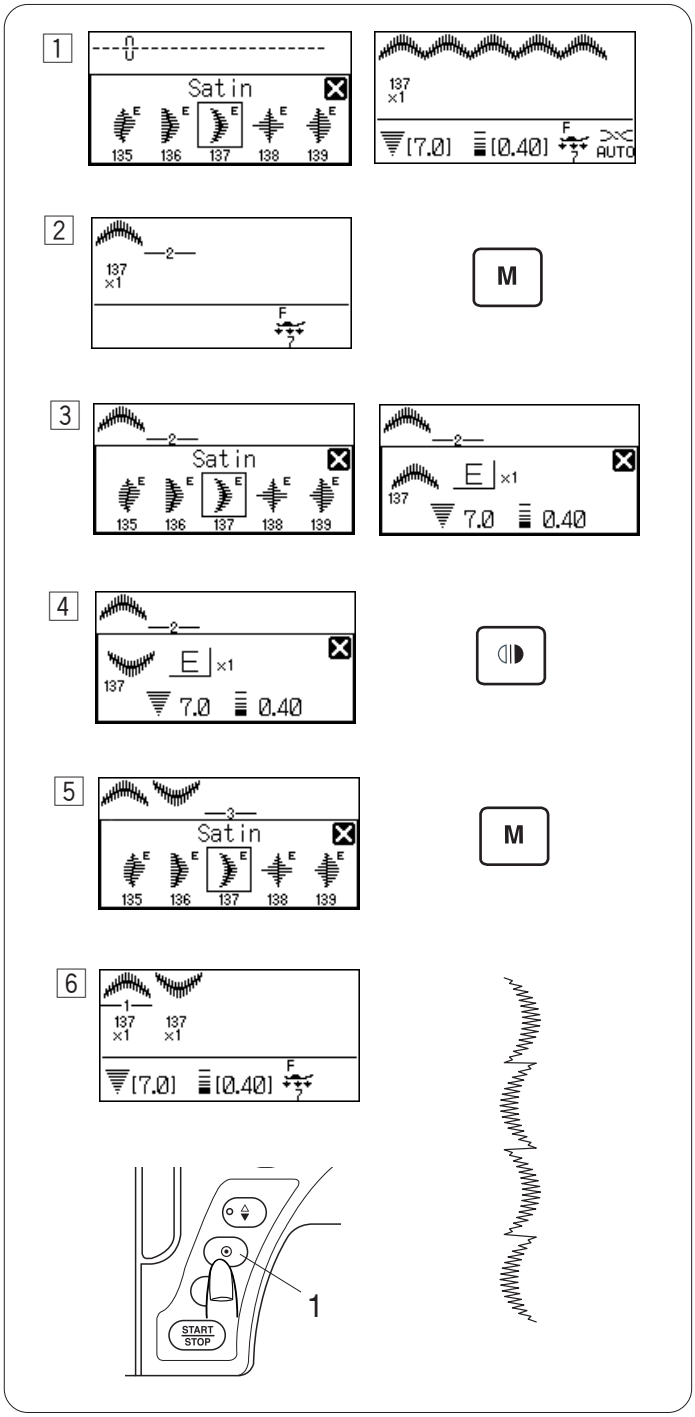

1 Select pattern 137 (Satin).

2 Press the memory key.

3 Select pattern 137 (Satin) again.

4 Press the mirror image key to turn over the pattern.

5 Press the memory key.

6 The machine will sew the pattern combination repeatedly.

NOTE:
If you press the auto-lock button in the middle of sewing, the machine will sew to the end of the current pattern, sew locking stitches and stop automatically.

1 Auto-lock button

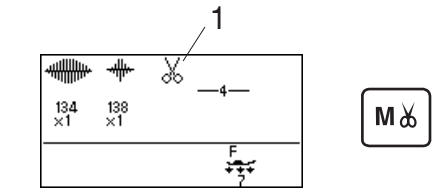

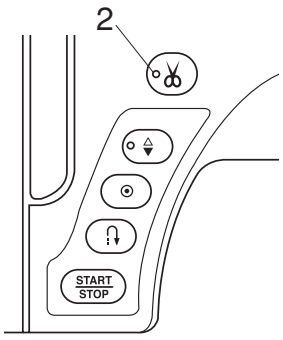

Programming Automatic Thread Cutting

To cut the threads automatically after sewing the pattern combination, press the automatic thread cutter key after programming the pattern combination.
The cutter sign will be indicated on the LCD screen and the LED signal on the thread cutter button will turn on.

1 Cutter sign
2 LED signal

The machine will sew the pattern combination and cut the threads, then stop automatically.

NOTE:
If you wish to cut the threads automatically after sewing the desired pattern, press the automatic thread cutter button after selecting the desired pattern.
When a pattern in the buttonhole group is selected, the machine will cut the threads and stop automatically after the pattern is completed.
When a pattern in any other group is selected, pressing the auto-lock button or reverse button will cause the machine to cut the threads and stop automatically.

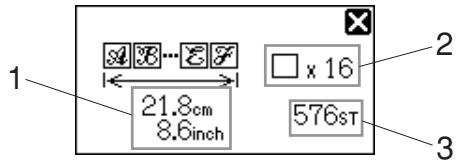

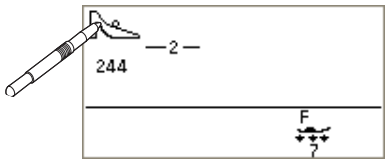

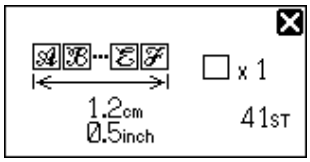

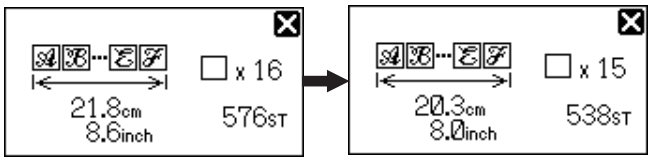

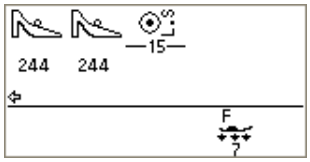

Checking Properties of a Pattern Combination

You can check the total length, number of patterns and stitch count of a pattern combination.

1 Total length in centimeters and inches
2 Number of patterns
3 Total stitch counts

If you wish to sew a series of pattern 244 within a span of 20 cm (8”), memorize one unit of pattern 244 and press the pattern icon on the LCD screen.

The length of the single pattern will be shown.
Calculate how many number of patterns are required and memorize the required number of patterns.

Check the total length of the pattern combination and adjust the number of the patterns if necessary.

Select the locking stitch L.S and press the memory key.
The machine will sew the memorized number of patterns and stop automatically.

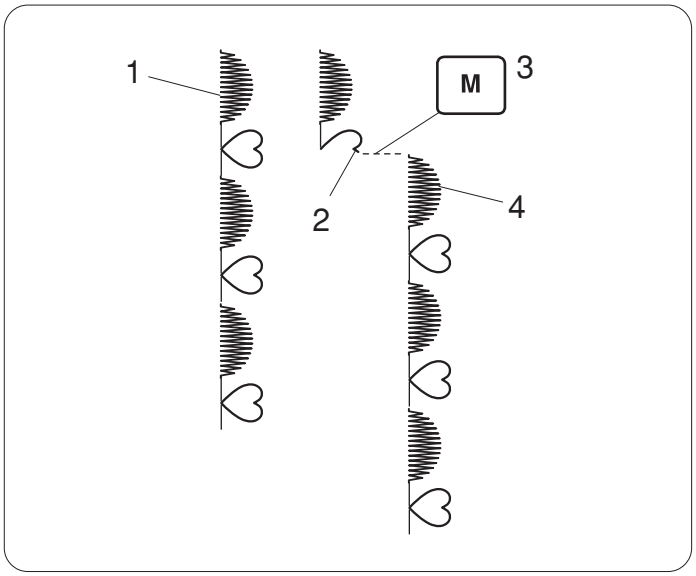

Sewing the Pattern Combination from the Beginning

If you have to stop sewing in the middle of a pattern combination and wish to sew it over again, press the memory key to sew the pattern combination from the beginning.

1 Programmed pattern combination
2 Sewing stopped.
3 Press the memory key.
4 Sewing starts from the beginning of the pattern combination.

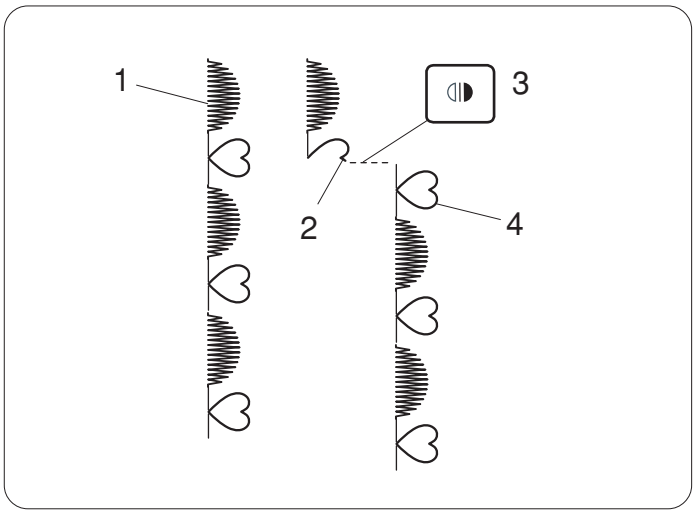

Sewing the Current Pattern from the Beginning

If you have to stop sewing in the middle of a pattern combination and wish to start sewing again from the incomplete pattern, press the mirror image key to sew from the beginning of the pattern last sewn.

1 Programmed pattern combination
2 Sewing stopped.
3 Press the mirror image key.
4 Sewing starts from the beginning of the incomplete pattern.

Bridge Stitches

Stitch patterns number 151 to 158 are bridge stitches, which are used to insert straight stitches after a stitch pattern.

Example: Combination of pattern 77 (Heirloom) and pattern 155 (Bridge)

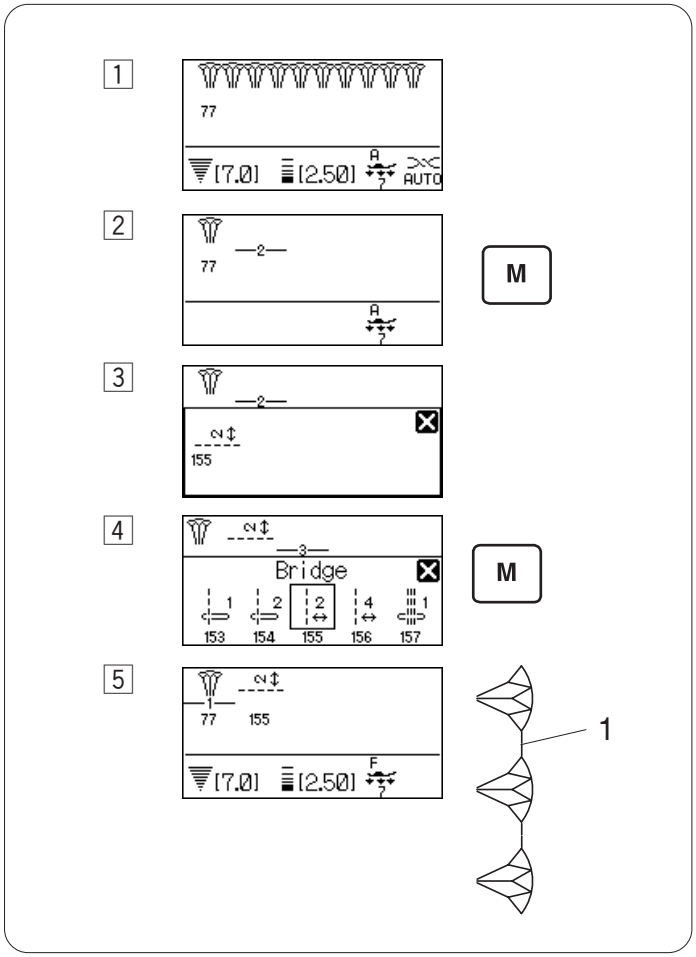

1 Select pattern 77 (Heirloom).

2 Press the memory key.

3 Select pattern 155 (Bridge).

4 Press the memory key.

5 Two counts of the straight stitch (bridge stitch) are added to pattern 77.

1 Bridge stitch

NOTES:
The number on the right of the stitch image indicates stitch counts to be inserted.
The stitch length and needle drop position of patterns 151 to 154 and 157 are independent from those of the combined pattern.
Patterns 155 to 158 will inherit the stitch length and needle drop position of a previous pattern in the programmed pattern combination.

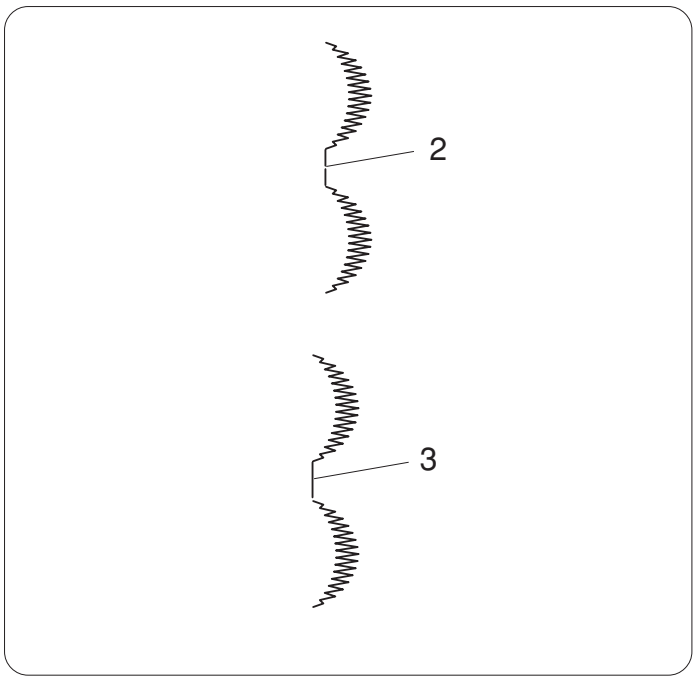

Use patterns 151-154 with satin stitches

2 Pattern 154 (Bridge)

NOTE:
Use pattern 157 if you wish to add straight stretch stitches.

Use a blank space if you wish to insert a space between stitch patterns.

3 Blank space

Programming French Knots

Example: Combination of French knot and bridge stitches

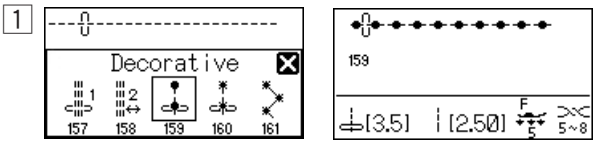

1 Select pattern 159 (Decorative).

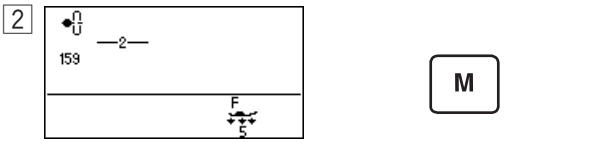

2 Press the memory key.

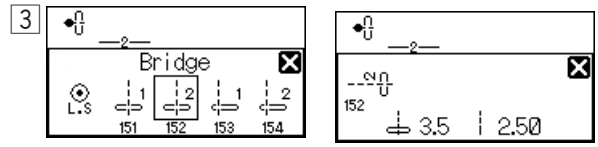

3 Select pattern 152 (Bridge).

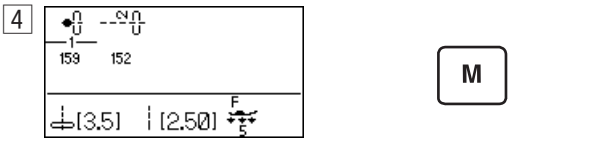

4 Press the memory key.

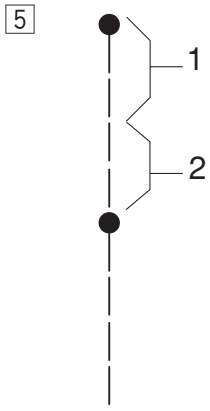

5 Two counts of straight stitch with center needle position will be added to the French knot.

1 French knot
2 Bridge stitch

MONOGRAMMING

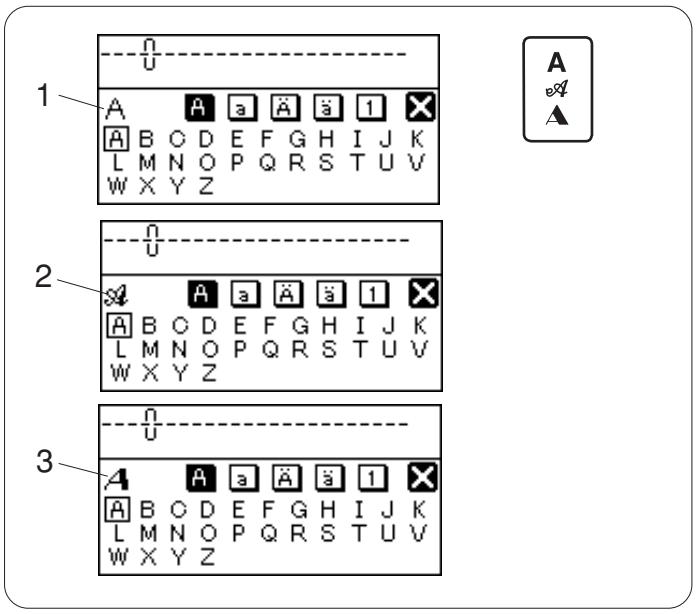

Selecting a Letter Style

Press the monogram key to select the letter style.
The monogram selection window will open.

The following 3 styles are available.

1 Block
2 Script
3 Broadway

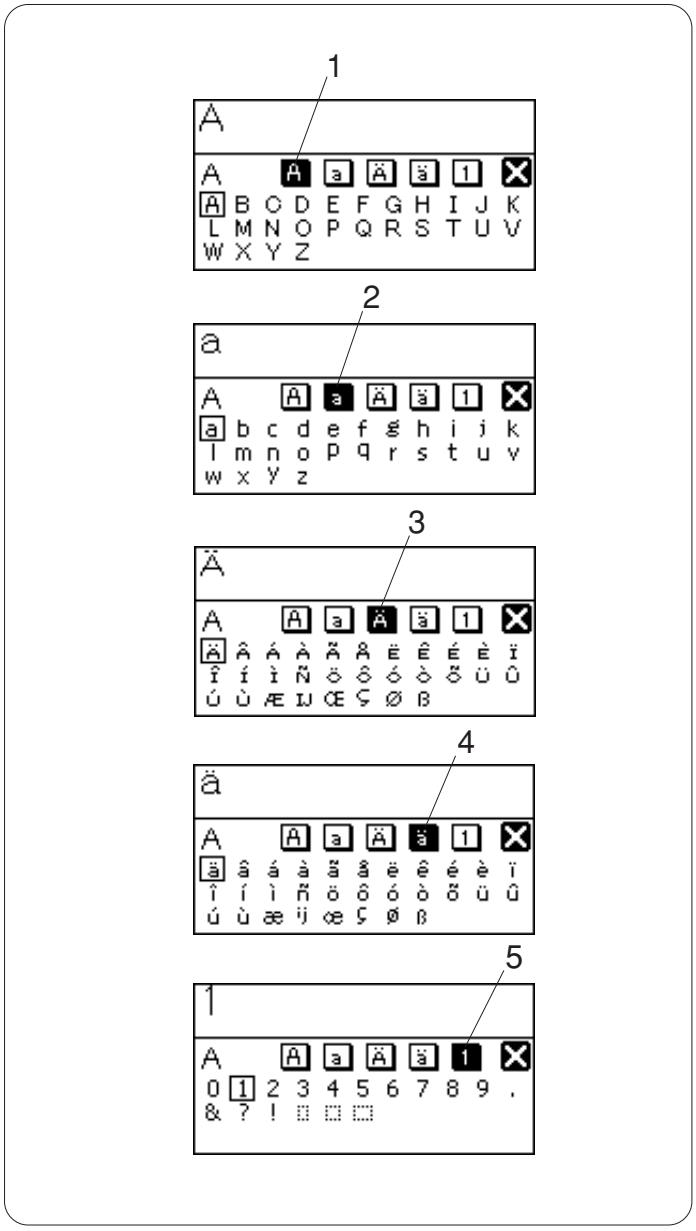

Selecting a Character

Turn the jog dial clockwise or counterclockwise to select the desired character and press the confirm button.

The LCD screen shows the upper case alphabet, lower case alphabet, upper case European letters, lower case European letters and numbers in this order.

1 Upper case alphabet
2 Lower case alphabet
3 Upper case European letters
4 Lower case European letters
5 Numbers

You can also select a character by pressing the icon of the desired case group and the character with the touch panel stylus.

Programming a Monogram

Example: To program “**R&B**”

1 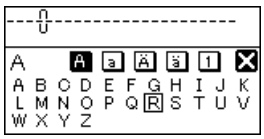



1 Press the monogram key.

2 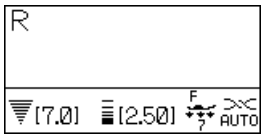

2 Select letter “**R**” (Block style).

3 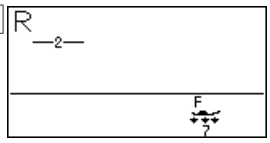

3 Press the memory key.

4 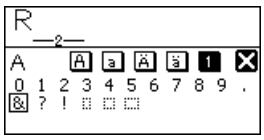

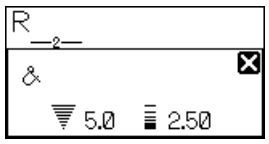

4 Select letter “**&**” (Block style).

5 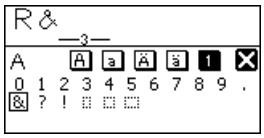

5 Press the memory key.

6 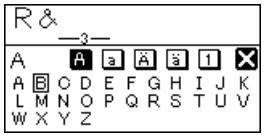

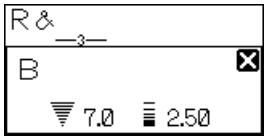

6 Select letter “**B**” (Block style).

7 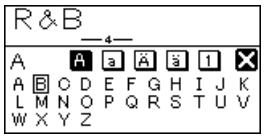

7 Press the memory key.

8 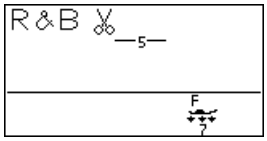

8 Press the auto thread cutter key

.

9 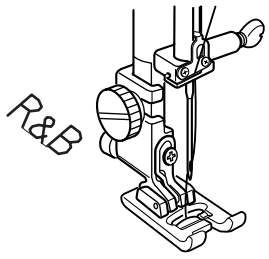

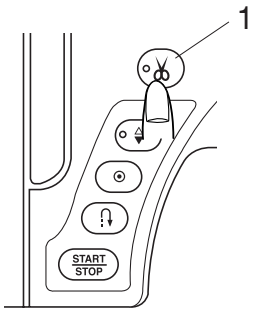

9 The machine will sew “R&B”, cut the threads and stop automatically.

NOTE:
If you cut the threads with the thread cutter button, press the up/down needle position button to bring the needle to the down position before sewing.
This prevents the needle mark of the extra stitch when cutting the threads.

1 Thread cutter button

EDITING A PATTERN COMBINATION

Viewing a Long Combination

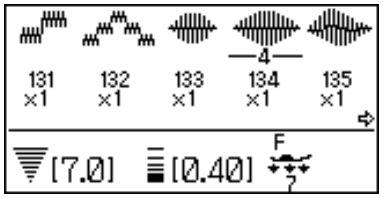



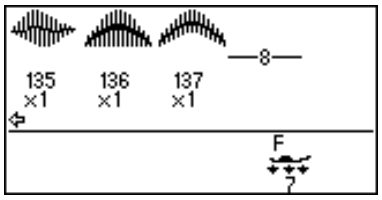



The LCD screen only shows 5 patterns or 9 characters at a time.
If the entire combination is not displayed, press the edit key to view the rest of the combination.

Press the right arrow on the edit key to shift the cursor to the right.
Press the left arrow on the edit key to shift the cursor to the left.

NOTE:
Arrow signs (⇦ , ⇨) on the LCD screen indicate that there is the rest of the combination in that direction.

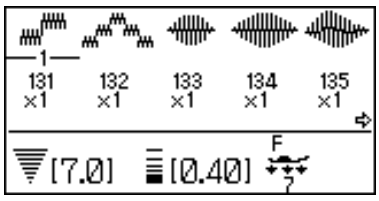

Once sewing has started, the cursor appears under the first pattern and will shift to the right as you sew.

Press the edit key again to view the hidden patterns or to edit the pattern combination.
The cursor will blink and can be moved to the desired position.

Deleting the Patterns or Characters

Example: Deleting pattern 136

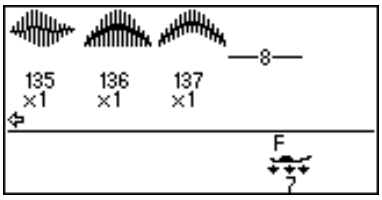



Press the edit key to shift the cursor under pattern 136.

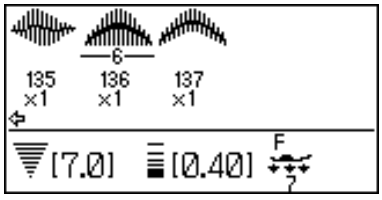



Press the clear key.

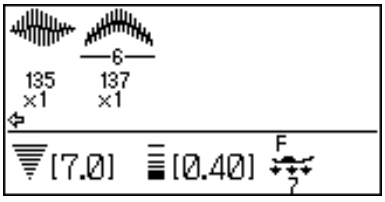

Pattern 136 will be deleted.

NOTE:
Pressing and holding the clear key will delete all the programmed patterns and the LCD screen will return to the display prior to programming.

Inserting a Pattern

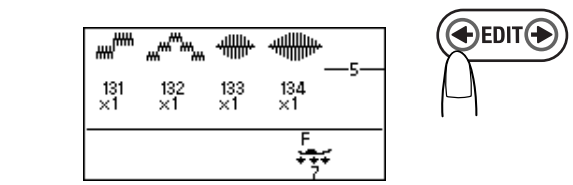

Example: Inserting a space.

Press the edit key to shift the cursor under the pattern immediately after where you wish to insert a space.

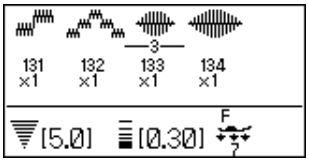

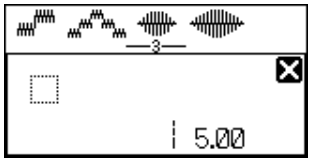

Select a space ⬚.



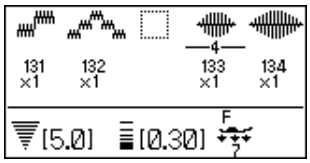

Press the memory key and a space will be inserted before pattern 133.

Duplicating a Pattern

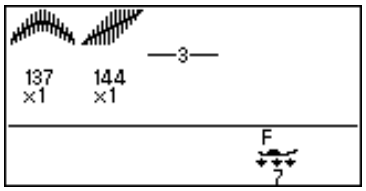



Press the edit key to shift the cursor under the pattern to be duplicated.

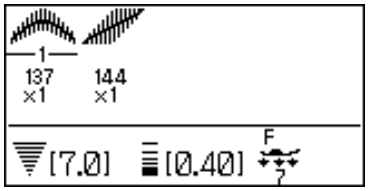



Press the memory key.

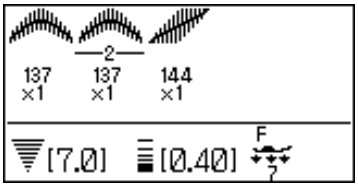

The pattern will be duplicated and memorized.

Uniform Stitch Adjustment

The stitch width and length of the programmed patterns can be uniformly adjusted.

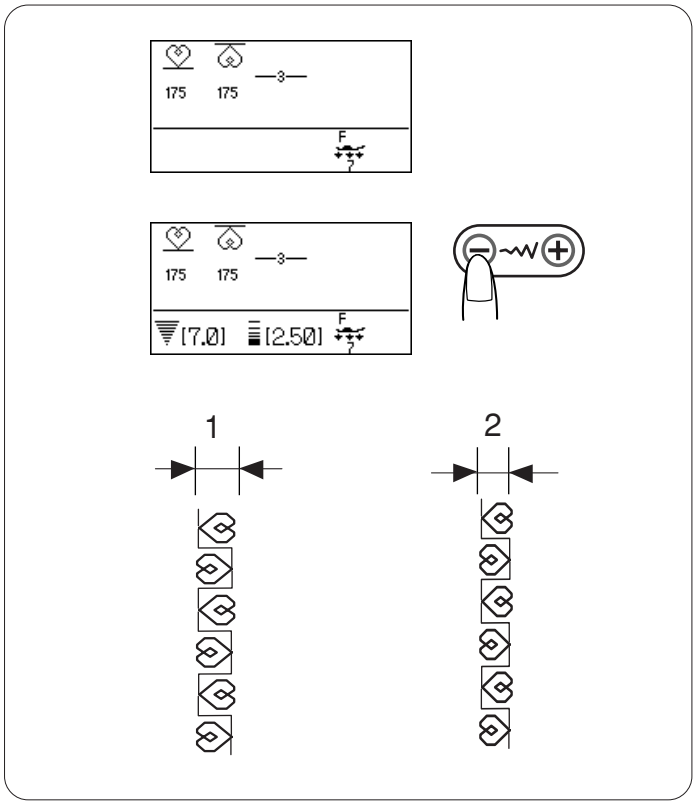

Example 1: Adjusting the stitch width of the programmed pattern 175 and its mirror image

Shift the cursor to the right of the last programmed pattern.
Press the stitch width adjusting key to adjust the stitch width.

NOTE:
Stitch length can be uniformly adjusted if the programmed patterns in the same category (satin stitches or stretch stitches) have been programmed.

The stitch width of the programmed patterns will be adjusted uniformly.

1 Original width
2 Uniformly adjusted width

Unified needle drop position:

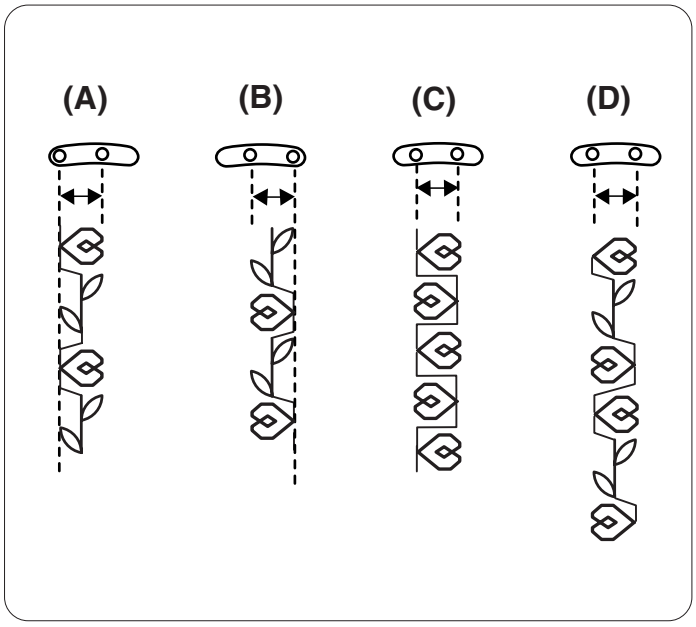

The needle drop position of the programmed patterns will vary depending on the pattern combination:

(A) Unified to the left when combining the patterns with the left needle position and the center needle position.

(B) Unified to the right when combining the patterns with the center needle position and the right needle position.

(C) Unified to the center when combining the patterns with the left needle position and the right needle position.

(D) Unified to the center when combining the patterns with the left, center and right needle positions.

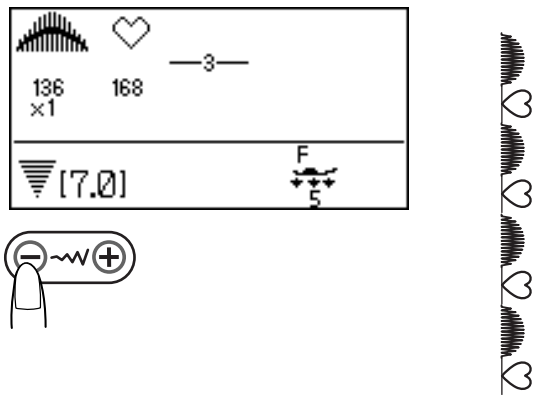

Programming Satin Stitches and Stretch Stitches

The stitch width of satin stitch and stretch stitch combinations can be uniformly adjusted.

Press the stitch width adjustment key.
The stitch width will be applied to all programmed patterns.

NOTE:
However uniform adjustment of the stitch length is not available. Adjust the stitch lengths individually.

Individual Stitch Adjustment

The stitch width and length can be individually adjusted for each pattern in a programmed combination.

Example: Changing the stitch width of the one pattern in the combination

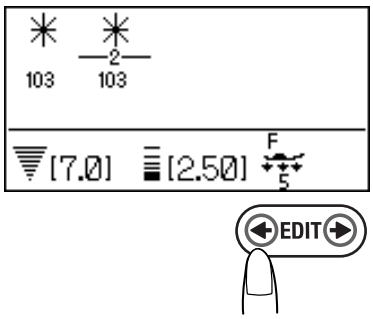

Press the edit key to shift the cursor under the pattern you wish to adjust.

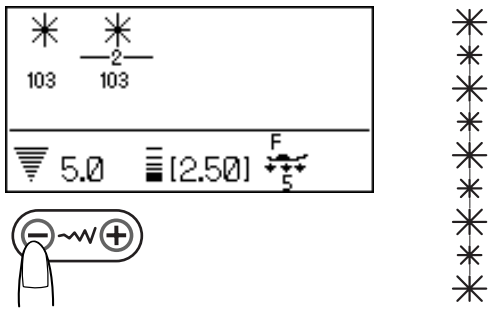

Press the stitch width adjusting key to adjust the width to “5.0”.

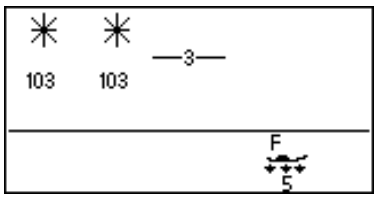

NOTES:
To view the stitch settings of each pattern, shift the cursor under the desired pattern then press the stitch width or length adjusting key. The settings will be displayed at the bottom of the LCD screen.
If you press the stitch width or length adjusting key when the cursor is to the right of the last programmed pattern, individual adjustments will be cancelled and uniform adjustment will be applied.

STORING AND RECALLING A PATTERN COMBINATION

Up to 20 pattern combinations can be stored in the memory for future use even after turning the power off. The stored pattern combination can be recalled by pressing the memory recall key.

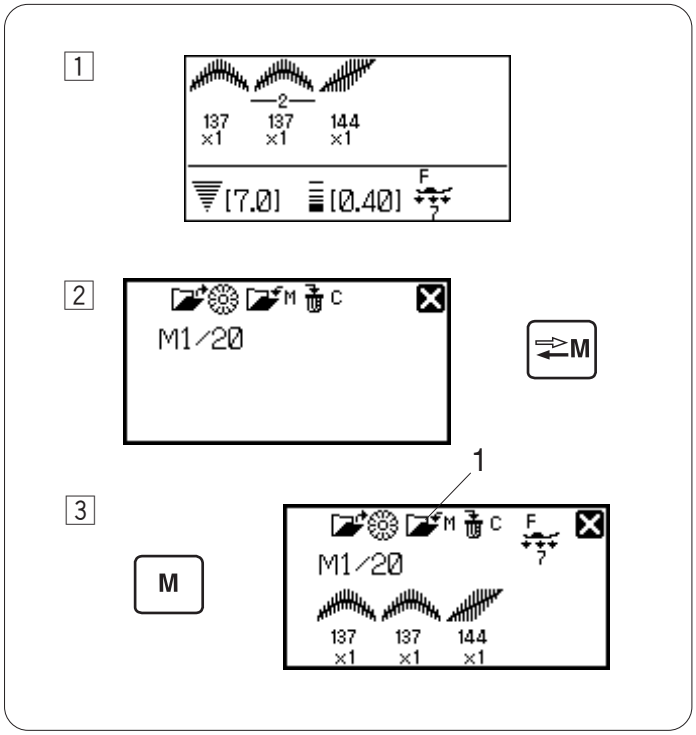

Storing a Pattern Combination

1 Program a pattern combination.
Press the memory recall key.

2 The LCD screen will show memory address M1 and the key function assignment.
Press the memory recall key or turn the jog dial to select the desired address.

3 Press the memory key or memory key icon on the LCD screen.
The pattern combination will be stored in the selected memory address.

1 Memory key icon

NOTE:
The machine beeps and an hourglass appears on the LCD screen while the machine is storing the pattern combination.
Do not turn the power switch off while the machine is beeping.

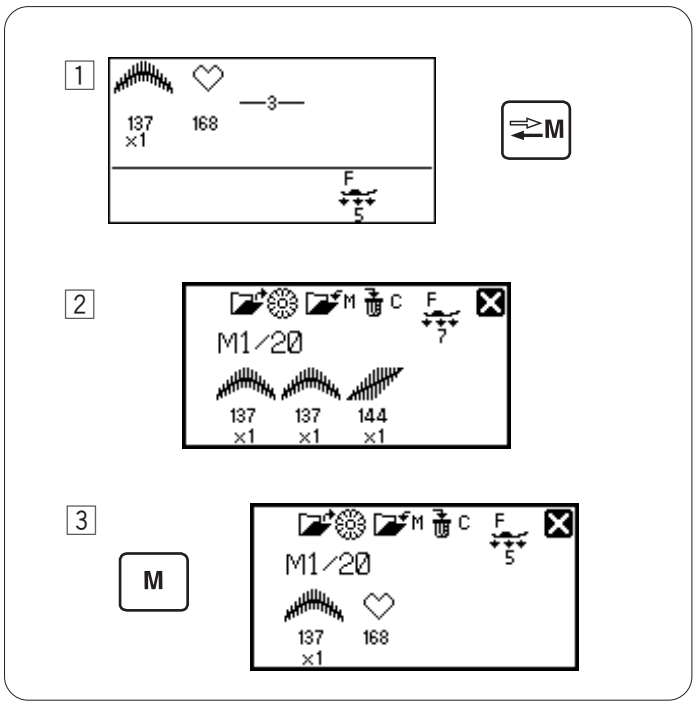

Overwriting a Stored Combination

1 Program a pattern combination.
Press the memory recall key to select the desired address.

2 If a pattern combination has been already stored, the LCD screen will show the image of the stored pattern combination.

3 Press the memory key or memory key icon on the LCD screen.
The stored combination will be replaced with the new one.

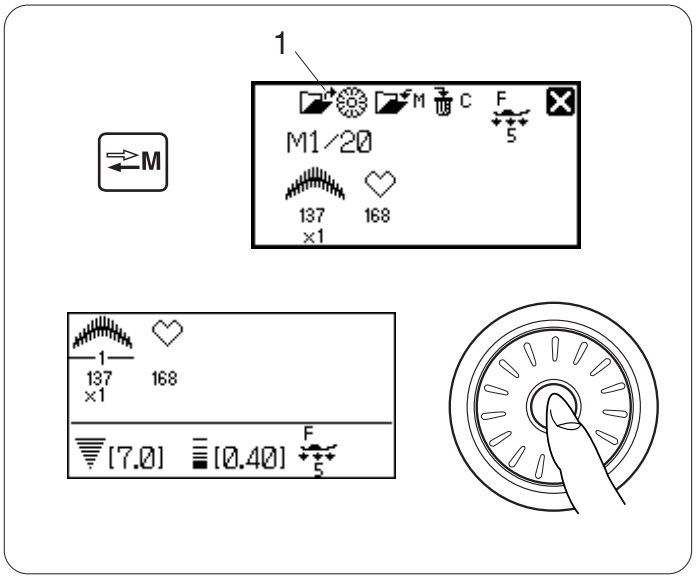

Recalling a Stored Combination

Press the memory recall key to select the memory address where the desired pattern combination is stored.

Press the confirm button or confirm button icon on the LCD screen to recall the stored combination.

1 Confirm button icon

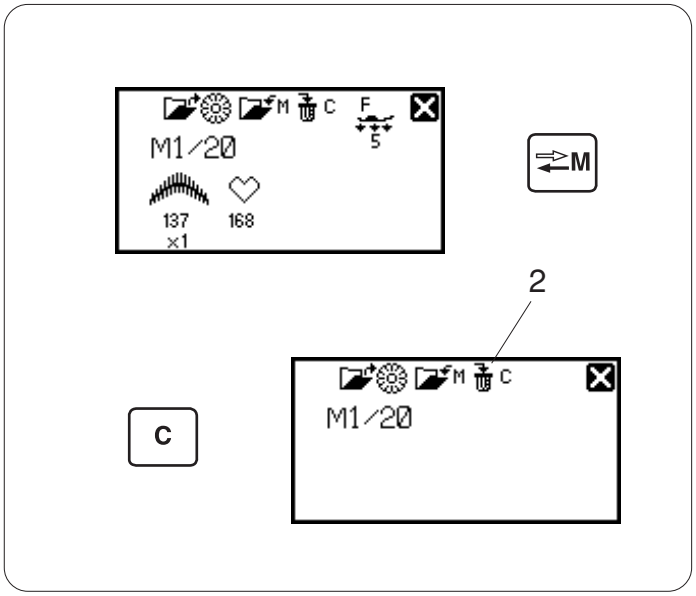

Deleting a Stored Combination

Press the memory recall key to select the memory address storing the pattern combination you wish to delete.

Press and hold the clear key or clear key icon C on the LCD screen to delete the stored combination.

2 Clear key icon

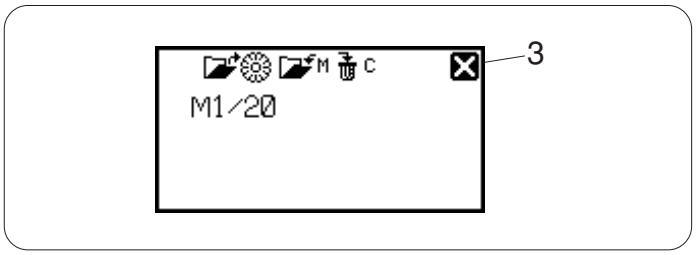

NOTE:
To close the memory recall window, press the cross mark.

3 Cross mark

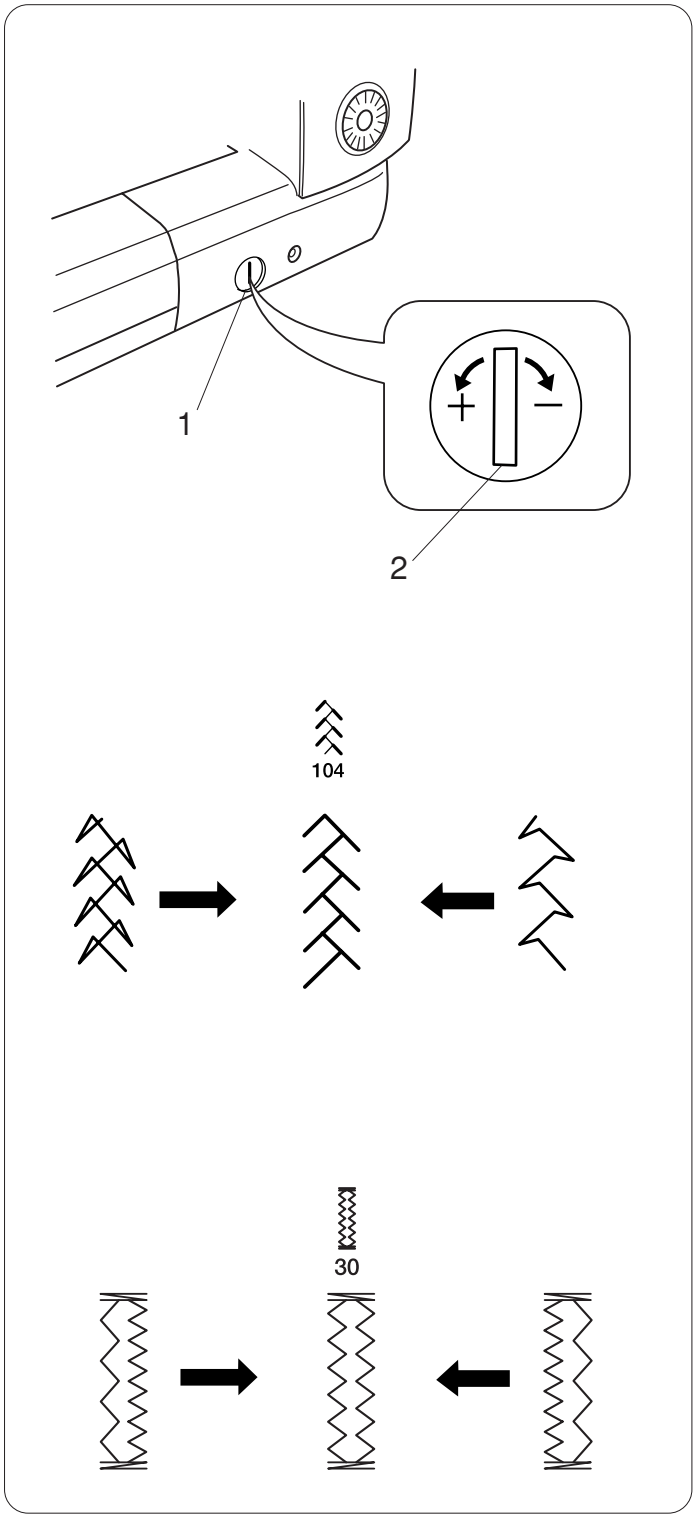

Correcting Distorted Stitch Patterns

The sewing results of the stitch patterns may vary depending upon sewing conditions, such as sewing speed, type of the fabric, number of layers etc.
Always test sew on a scrap piece of the fabric that you wish to use.

If stretch stitch patterns or the stretch buttonhole is distorted, correct it with the feed balancing dial.
Set the feed balancing dial at the neutral position for normal sewing.

1 Feed balancing dial
2 Neutral position

Stretch stitch pattern

Example: Pattern 104 (Quilt)

If the pattern is compressed, turn the feed balancing dial in the direction of “+”.
If the pattern is drawn out, turn the feed balancing dial in the direction of “–”.

Stitch balance of the stretch buttonholes

Example: Patterns 30 and 32 (Buttonhole)

If the right row is denser, turn the dial in the direction of “+”.
If the left row is denser, turn the dial in the direction of “–”.

NOTE:

Return the feed balancing dial to its neutral position when the sewing is finished.

Cleaning the Hook Race, Feed Dog and Thread Cutter Mechanism

⚠ WARNING:
Turn the power switch off and unplug the machine before cleaning.

⚠ CAUTION:
Make sure to open the automatic needle converter before removing the needle plate.

NOTE:
Do not dismantle the machine in any way other than what is explained on this page.

1 Remove the needle and presser foot. Remove the setscrews and remove the needle plate.
- 1 Screwdriver
- 2 Setscrew
- 3 Needle plate

2 Take out the bobbin. Lift up the bobbin holder and remove it.
- 4 Bobbin holder

3 Clean the bobbin holder with the lint brush and a soft dry cloth.
- 5 Lint brush

4 Clean the feed dog, thread cutter mechanism and hook race with the lint brush.
- 6 Feed dog
- 7 Thread cutter mechanism
- 8 Hook race

5 Clean the hook race with a dry cloth.

Reattaching Bobbin Holder and Needle Plate

6 Insert the bobbin holder. The knob of the bobbin holder should fit next to the stopper on the hook race. Be sure to align the triangle marks on the bobbin holder and stopper.
- 9 Knob
- 10 Stopper
- 11 Triangle marks

7 Reattach the needle plate and tighten the screws.

NOTE:
After cleaning the machine, insert the needle and attach the presser foot.

Problems and Warning Signals

If a buzzer sounds and the LCD screen shows a warning sign, follow the guidance below.

Warning Sign	Cause	Try this
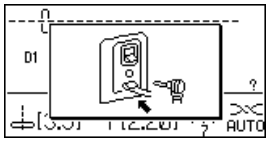	The foot control is disconnected while sewing.	Connect the foot control and start the machine again.
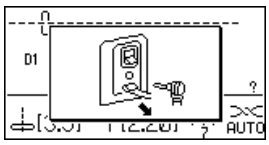	The start/stop button is pressed with the foot control connected.	Disconnect the foot control.
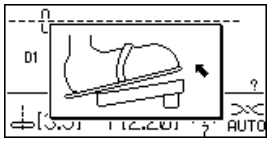	The power is turned on while depressing the foot control.	Release the foot control.
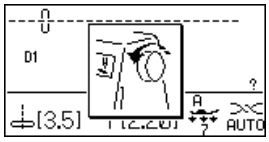	The power is turned on with the needle in the down position.	Turn the hand wheel to raise the needle.
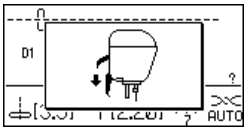 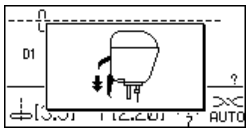	The machine is started without lowering the presser foot. The machine will stop if the presser foot is raised while sewing.	Lower the presser foot and start the machine. Lower the presser foot and start the machine again.
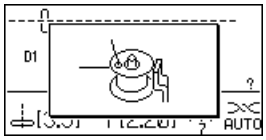	The bobbin winder spindle is shifted to the right.	Shift the bobbin winder spindle to the left for stitching.
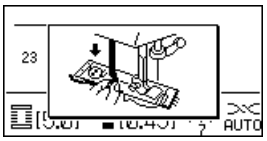	The machine will stop if the buttonhole is sewn without lowering the buttonhole lever.	Lower the buttonhole lever and start the machine again.
	The foot control is released or the start/stop button is pressed while sewing a locking stitch.	Start the machine again to let the machine stop automatically.
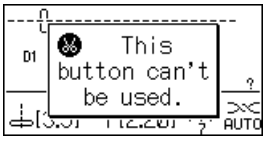	The auto thread cutter button is pressed while the machine is still initializing after turning the power on. Or, the thread cutter button is pressed 4 times in a row.	Press the thread cutter button after the machine stops.
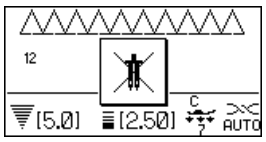	The twin needle button is pressed when a pattern unsuitable for twin needle sewing has been selected.	Select the pattern suitable for twin needle sewing.

Warning Sign	Cause	Try this
	The elongation key is pressed when a pattern that cannot be elongated has been selected.	Elongation is applicable only to satin stitches.
	The memory key is pressed when a pattern that cannot be memorized has been selected.	Select a pattern that can be memorized.
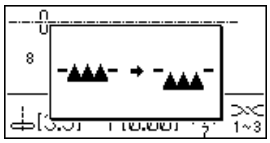	The machine is started without lowering the feed dog with basting or button sewing selected.	Lower the feed dog.
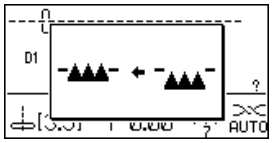	The machine is started with the feed dog lowered.	Raise the feed dog.
	The machine is started after halting due to overload. The feed dog is lowered while the machine is running. The presser foot is raised while the machine is running. The bobbin winder spindle is shifted to the left while winding a bobbin.	Wait for at least 15 seconds to restart. Remove tangled threads around take-up lever, hook race and automatic thread cutting mechanism. Do not lower the feed dog, raise presser foot or shift bobbin winder spindle while the machine is running.
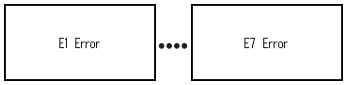	The machine does not work properly due to a problem in the control circuit.	Contact the service center or the store from whom the machine was purchased.
	The automatic plate converter  does not work properly.	Turn the power off and remove tangled threads around the automatic thread cutting mechanism.
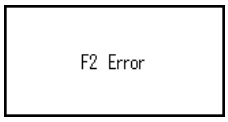	The needle bar does not move to the center when pattern D1S, D2S or D3S is selected.	Turn the power off and remove tangled threads around the needle bar inside the face plate.
The LCD screen shows an abnormal display.	Turn the power off and turn it on again.	

Audible Signal	The Buzzer sounds when:
pip	Normal operation
pip-pip	Deleting a pattern combination with the clear key
pip-pip-pip	Invalid operation or malfunction
peep	E1-E7 or F1-F2 error occured
pip pi-pi-pi-peep	Buttonhole is completed.

Troubleshooting

Condition	Cause	Reference
The needle thread breaks	1. The needle thread is not threaded properly.	Page 17
	2. The needle thread tension is too tight.	Page 21
	3. The needle is bent or blunt.	Page 20
	4. The needle is incorrectly inserted.	Page 20
	5. The needle thread and the bobbin thread are not set under the presser foot when start sewing.	Page 29
	6. The threads were not drawn to the rear after sewing.	Page 30
	7. The fabric is moved too fast when stitching free motion quilting.	Page 66
	8. The thread is tangled around the spool.	Use the spool holder.
The bobbin thread breaks	1. The bobbin thread is not threaded properly in the bobbin holder.	Page 16
	2. Lint has collected in the bobbin holder.	Page 89
	3. The bobbin is damaged and does not turn smoothly.	Change the bobbin.
The needle breaks	1. The needle is incorrectly inserted.	Page 20
	2. The needle clamp screw is loose.	Page 20
	3. The fabric is pulled forward when using the open-toe foot.	Page 66
	4. The needle is too fine for the fabric being used.	Page 20
	5. An inappropriate presser foot is used.	Use the correct foot.
Skipped stitches	1. The needle is incorrectly inserted, bent or blunt.	Page 20
	2. The needle and/or threads are not suitable for the work being sewn.	Page 20
	3. A stretch stitch needle is not being used for sewing stretch, very fine fabrics and synthetics.	Use the stretch stitch needle.
	4. The needle thread is not threaded properly.	Page 17
	5. A poor quality needle is used.	Change the needle.
Seam puckering	1. The needle thread tension is too tight.	Page 21
	2. The needle thread is not threaded properly.	Page 17
	3. The needle is too heavy for the fabric being sewn.	Page 20
	4. The stitch length is too long for the fabric.	Make stitch shorter.
	5. The foot pressure is not adjusted properly.	Page 22
	A stabilizer is not used when sewing very fine fabrics.	Apply a stabilizer.
The cloth is not feeding smoothly	1. The feed dog is packed with lint.	Page 89
	2. The stitches are too fine.	Make stitch longer.
	3. The feed dog is not raised after ”drop feed” sewing.	Page 22
Loops on the seams	1. The needle thread tension is too loose.	Page 21
	2. The needle is too thick or too fine for the fabric.	Page 20
The machine does not work	1. The machine is not plugged in or foot control is not connected.	Page 5
	2. Thread has been caught in the hook race.	Page 89
	3. The presser foot is not lowered.	Page 9
Buttonhole sewing is not sewn properly	1. The stitch density is not suitable for the fabric being sewn.	Pages 55, 57
	2. The interfacing has not been used for the stretch or synthetic fabric.	Apply an interfacing.
	3. The buttonhole lever is not lowered.	Page 52
The machine is noisy	1. Thread has been caught in the hook race.	Page 89
	2. Lint has built up in the hook race or bobbin holder.	Page 89
Layers shift	1. The foot pressure is not suitable for fabrics being sewn.	Page 22
Thread cutter LED blinks	1. The presser foot is raised before auto thread cutting is complete.	Lower the presser foot.
	2. Threads have been caught in the thread cutter mechanism.	Page 89

It is not abnormal for a faint humming sound to be heard from the internal motors.
The LCD screen and function key area may become warm after several hours of continuous use.

858-800-001 ① (EN)