Instruction Book

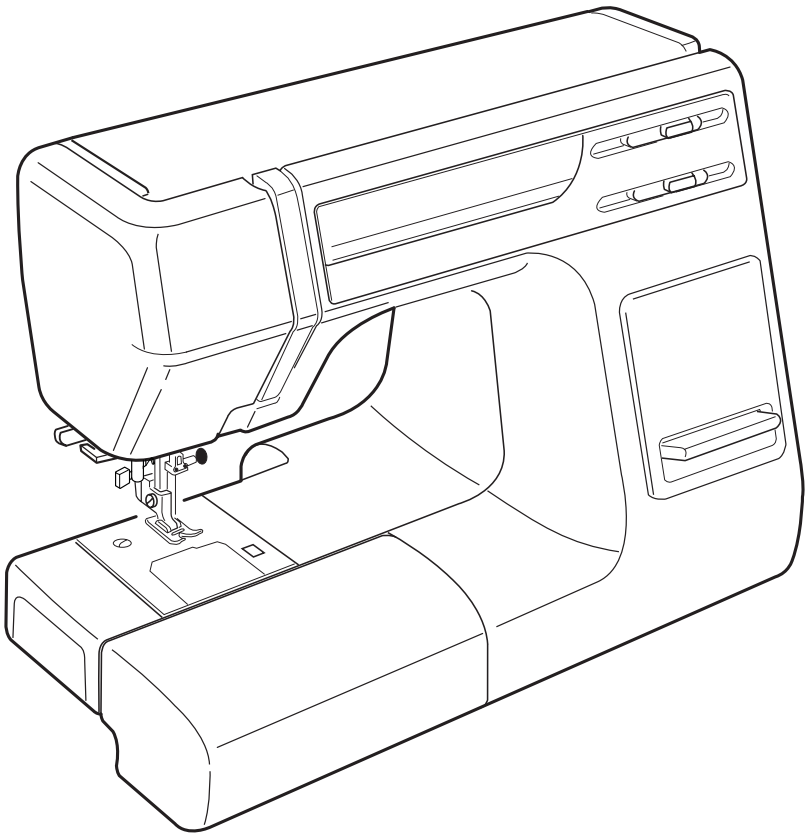

IMPORTANT SAFETY INSTRUCTIONS

When using an electrical appliance, basic safety precautions should always be followed, including the following:
This sewing machine is designed and manufactured for household use only.
Read all instructions before using this sewing machine.

DANGER — To reduce the risk of electric shock:

1. An appliance should never be left unattended when plugged in. Always unplug this sewing machine from the electric outlet immediately after using and before cleaning.

WARNING — To reduce the risk of burns, fire, electric shock, or injury to persons:

1. Do not allow to be used as a toy. Close attention is necessary when this sewing machine is used by or near children.
2. Use this appliance only for its intended use as described in this owner's manual.
   Use only attachments recommended by the manufacturer as contained in this owner's manual.
3. Never operate this sewing machine if it has a damaged cord or plug, if it is not working properly, if it has been dropped or damaged, or dropped into water.
   Return this sewing machine to the nearest authorized dealer or service center for examination, repair, electrical or mechanical adjustment.
4. Never operate the appliance with any air opening blocked. Keep ventilation openings of this sewing machine and foot controller free from accumulation of lint, dust and loose cloth.
5. Never drop or insert any object into any opening.
6. Do not use outdoors.
7. Do not operate where aerosol (spray) products are being used or where oxygen is being administered.
8. To disconnect, turn all controls to the off ("O") position, then remove plug from outlet.
9. Do not unplug by pulling on cord. To unplug, grasp the plug, not the cord.
10. Keep fingers away from all moving parts. Special care is required around the sewing machine needle and/or cutting blade.
11. Always use the proper needle plate. The wrong plate can cause the needle to break.
12. Do not use bent needles.
13. Do not pull or push fabric while stitching. It may deflect the needle causing it to break.
14. Switch this sewing machine off ("O") when making any adjustment in the needle area, such as threading the needle, changing the needle, threading the bobbin or changing the presser foot, and the like.
15. Always unplug this sewing machine from the electrical outlet when removing covers, lubricating, or when making any other adjustments mentioned in this owner's manual.

SAVE THESE INSTRUCTIONS

For Europe only:
This appliance can be used by children aged from 8 years and above and persons with reduced physical, sensory or mental capabilities or lack of experience and knowledge if they have been given supervision or instruction concerning use of the appliance in a safe way and understand the hazards involved. Children shall not play with the appliance. Cleaning and user maintenance shall not be made by children without supervision.

For outside Europe (except U.S.A and Canada):
This appliance is not intended for use by persons (including children) with reduced physical, sensory or mental capabilities, or lack of experience and knowledge, unless they have been given supervision or instruction concerning use of the appliance by a person responsible for their safety.
Children should be supervised to ensure that they do not play with this appliance.



Please note that on disposal, this product must be safely recycled in accordance with relevant National legislation relating to electrical/electronic products. If in doubt please contact your retailer for guidance. (European Union only)

TABLE OF CONTENTS

SECTION I
ESSENTIAL PARTS

Names of Parts 2
Foot Storage Compartment 3
Extension Table (Accessory Storage Box) 3
Removable Extension Table 4

SECTION II
GETTING READY TO SEW

Connecting the Machine to the Power Supply .. 5
Foot Control 5
Additional Clearance 6
Pressure Dial 6
Dropping the Feed Dogs 6
Changing the Presser Foot 7
Removing and Attaching the Foot Holder 7
Reverse Stitch Button 8
Seam Guide Line 8
Changing Needle 9
  Fabric, Thread and Needle Chart 9
Winding the Bobbin 10
  Horizontal Spool Pin 10
  Additional Spool Pin 10
  Removing the Bobbin 10
  Threading the Bobbin Winder 11
  Inserting the Bobbin 12
Threading the Machine 13
Needle Threader 14
Drawing Up Bobbin Thread 15
Balancing Needle Thread Tension 16
  Thread Tension for Zigzag Sewing 16
Pattern Selector Dial 17
Zigzag Width Control 17
Stitch Length Control 17
Variable Needle Position 17

SECTION III
BASIC SEWING

Straight Stitch Sewing 18
Changing the Sewing Directions 19
Straight Stitching on Heavy Fabrics 19

SECTION IV
UTILITY STITCHING

Zigzag Stitch 20
Overcasting 20
Overedge Stitch 21
Tricot Stitch 21
Triple Strength Stitch 22
Outline Stretch Stitch 22
Sewing Buttons 23
Automatic Buttonhole 24
Manual Buttonhole 26
Corded Buttonhole 27
Zipper Application 28
Rolled Hem 31
Blind Stitch Hemming 32

SECTION V
DECORATIVE STITCHING

Decorative Satin Stitch Patterns 33
Stretch Stitch Patterns 33
Adjusting Stretch Stitch Balance 34
Smocking 34
Quilting 35
Pin Tucking 36
Shell Tuck 37
Fagoting 37
Applique 38
Patch Work 38

SECTION VI
CARE AND MAINTENANCE

Cleaning the Hook Race 39
Trouble Shooting 40

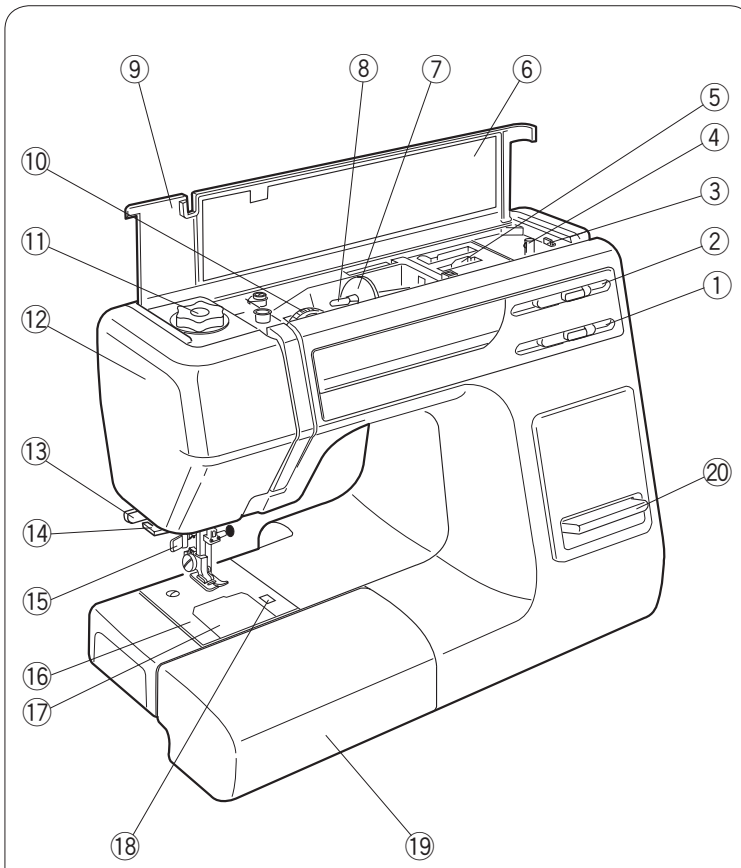

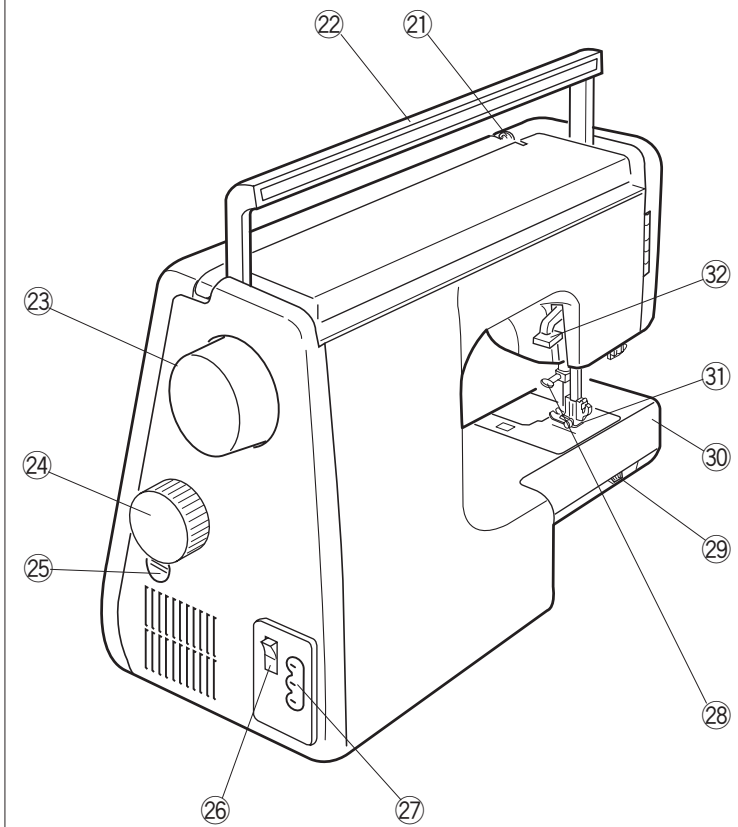

SECTION I
ESSENTIAL PARTS

Names of Parts

① Stitch length control
② Zigzag width control
③ Bobbin winder stopper
④ Bobbin winder spindle
⑤ Foot storage compartment
⑥ Flip-top sewing instruction panel
⑦ Spool holder (large)
⑧ Spool pin
⑨ Top cover
⑩ Thread tension dial
⑪ Pressure dial
⑫ Face plate
⑬ Buttonhole lever
⑭ Thread cutter
⑮ Needle threader
⑯ Needle plate
⑰ Hook cover plate
⑱ Hook cover plate release button
⑲ Extension table
(Accessory storage box)
⑳ Reverse stitch button

㉑ Thread take-up lever
㉒ Carrying handle
㉓ Handwheel
㉔ Pattern selector dial
㉕ Feed balance dial
㉖ Power switch
㉗ Machine socket
㉘ Needle clamp screw
㉙ Drop feed lever
㉚ Free arm
㉛ Presser foot
㉜ Presser foot lifter

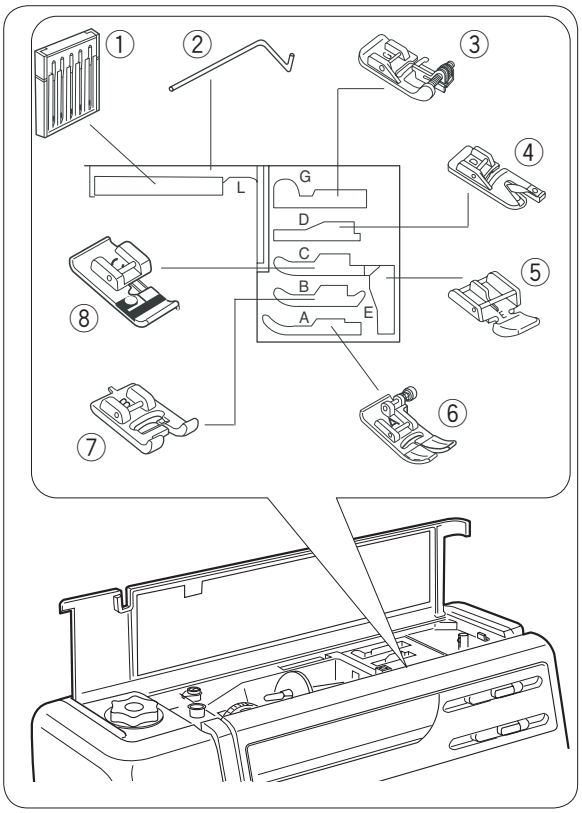

Foot Storage Compartment

Each presser foot and pocket is lettered for easy identification and storage. To achieve optimum sewing results, use the foot recommended for each sewing technique.

① Needle case
② L. Quilter
③ G. Blind stitch hem foot
④ D. Hemmer foot
⑤ E. Zipper foot
⑥ A. Zigzag foot
⑦ B. Transparent buttonhole foot
⑧ C. Overedge foot

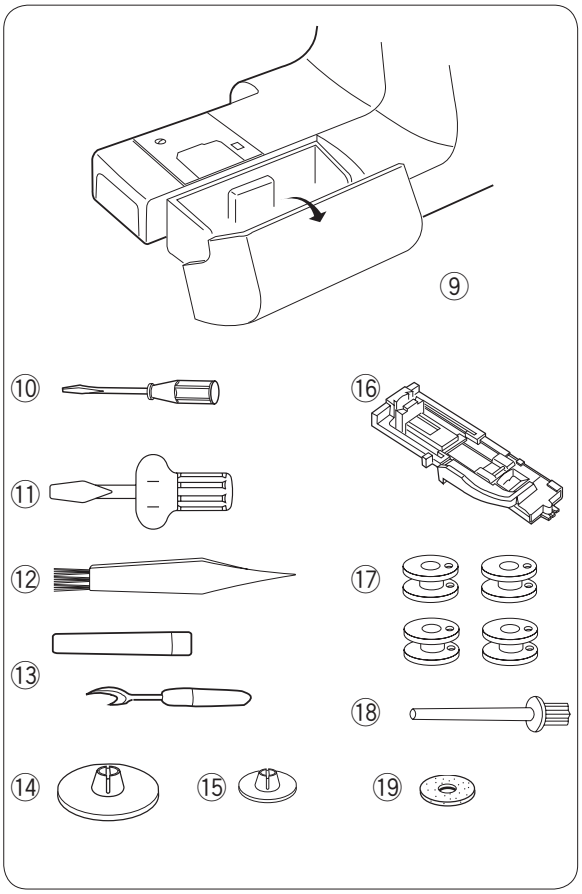

Extension Table (Accessory Storage Box)

Sewing accessoires are conveniently located under the extension table.

⑨ Extension Table

⑩ Screwdriver (large)
⑪ Screwdriver (small)
⑫ Lint brush
⑬ Seam ripper (buttonhole opener)
⑭ Spool holder (large)
⑮ Spool holder (small)
⑯ R. Automatic buttonhole foot
⑰ Bobbin X 5 (1 set on the machine)
⑱ Extra spool pin
⑲ Felt

Removable Extension Table

Extension Table
The extension table provides added sewing surface and can be easily removed for free arm sewing.

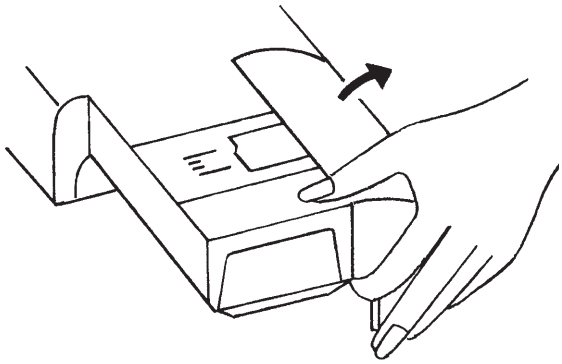

For free arm sewing
Lift out the extension table, as illustrated.

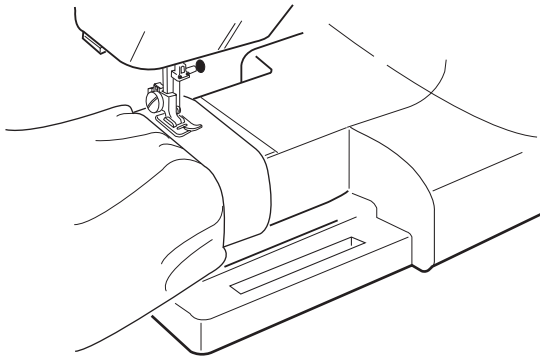

Free arm sewing:
The free arm is used for stitching sleeves, waistbands, pant legs or any other tubular garments.
It is also useful for darning socks or elbows.

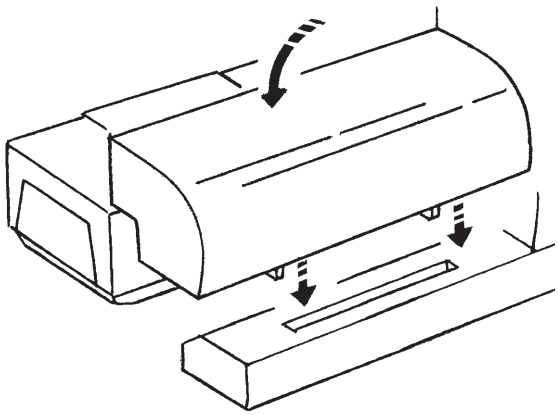

For attaching the table
Position the two pins of the storage box on the base slit and push down gently.

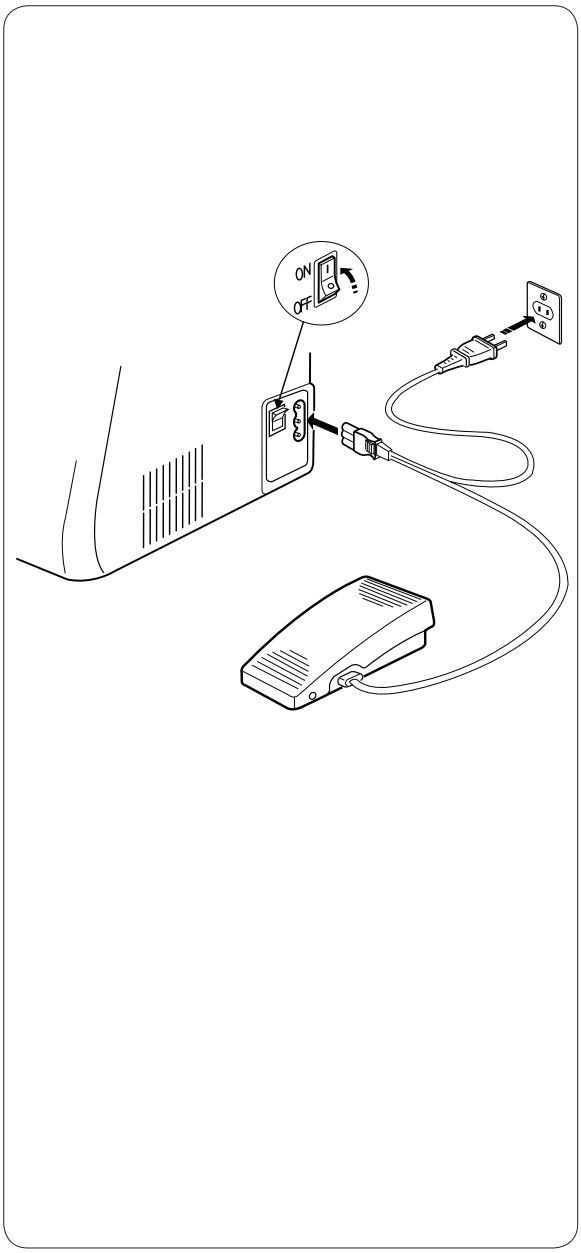

SECTION II
GETTING READY TO SEW

Connecting the Machine to the Power Supply

Before connecting the power, make sure the voltage and frequency of your electrical power conform to the machine.
Switch off the power, fit the nonreversible plug into the machine socket and plug the machine into the power supply.
Switch on the power.

While in operation, always keep your eyes on the sewing area, and do not touch any moving parts such as the thread take-up lever, handwheel or needle.

Always turn off the power switch and unplug from the power supply:
- when leaving the machine unattended.
- when attaching or removing parts.
- when cleaning the machine.

Do not place anything on the foot control, otherwise the machine will run intermittently.

Operating Instructions:
The symbol “O” of a switch indicates the “off” position of a switch.
For an appliance with a polarized plug (one blade wider than the other):
To reduce the risk of electrical shock, this plug is intended to fit in a polarized outlet only one way.
If it does not fit fully in the outlet, reverse the plug. If it still does not fit,
contact a qualified electrician to install the proper outlet.
Do not modify the plug in any way.

The foot controller Model YC-482J or TJC-150 is used with this sewing machine (USA market only).

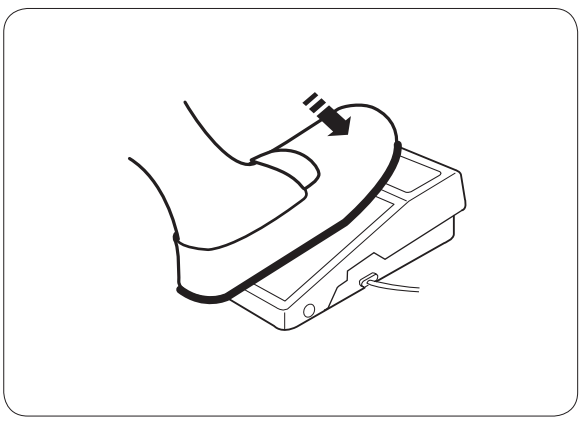

Foot Control

Sewing speed can be varied by the foot control.
The harder you press on the control, the faster the machine runs.

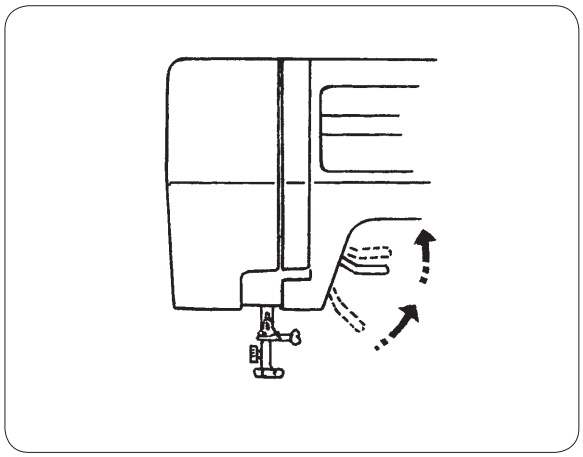

Additional Clearance

The presser foot can be raised higher for additional clearance.

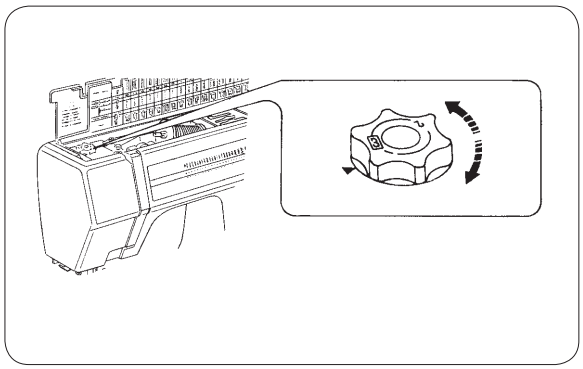

Pressure Dial

The pressure dial should be set at “3” for regular sewing. Reduce the pressure to “2” for appliques.
Set the pressure to “1” when sewing chiffon, lace, organdy and other fine fabrics. Velours and knits with a lot of stretch may also require a “1” setting.

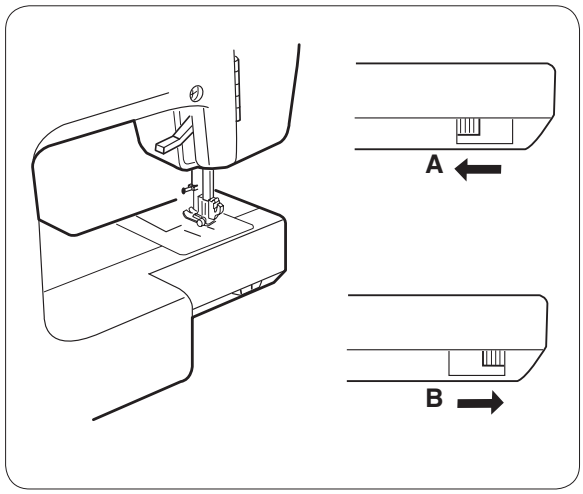

Dropping the Feed Dogs

Drop feed lever is located underneath of free arm bed.

A: To raise the feed dogs, push the lever to the direction of arrow as illustrated.

B: For dropping the feed dogs, push the lever to the direction of arrow as illustrated.

* Feed dogs must always be up for normal sewing.

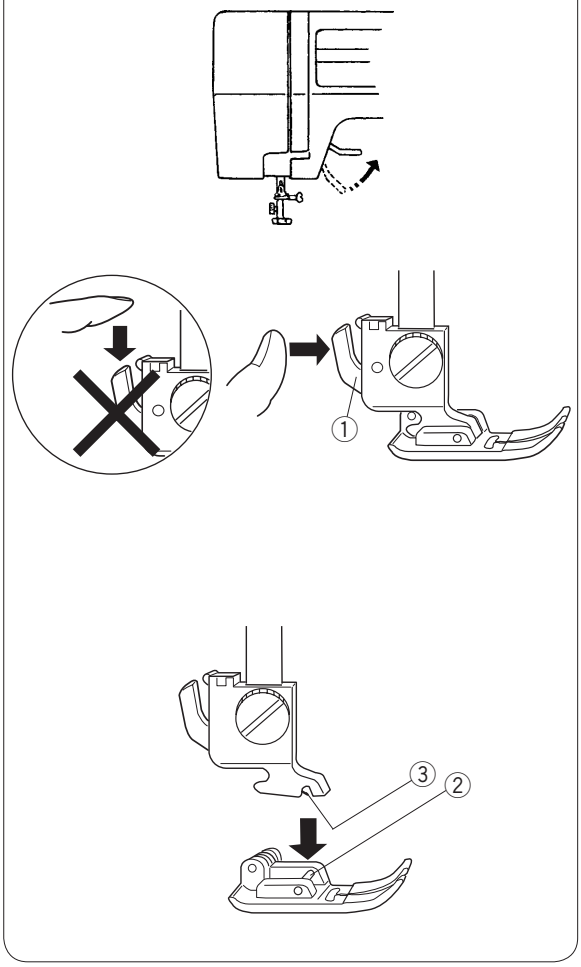

Changing the Presser Foot

⚠ CAUTION:
Turn the power switch off before changing the presser foot.

Removing the presser foot
Raise the needle to its highest position by turning the handwheel counterclockwise. Raise the presser foot, and press the lever ① on the back of the foot holder.

Attaching the presser foot
Place the selected presser foot so that the pin ② on the foot lies just under the groove ③ in the foot holder. Lower the presser bar to lock the foot into the place.

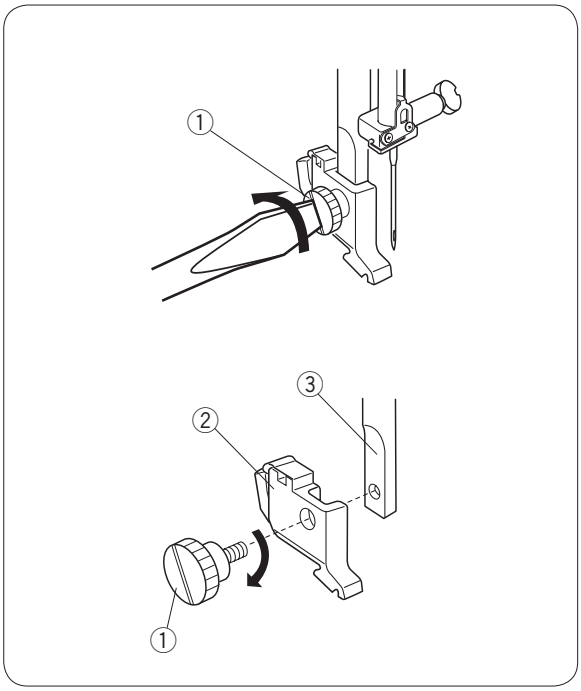

Removing and Attaching the Foot Holder

Removing the foot holder
Raise the needle to its highest position by turning the handwheel counterclockwise. Raise the presser foot, and remove the thumbscrew ① by turning it counterclockwise with a screwdriver.

Attaching the foot holder
Align the hole in the foot holder ② with the threaded hole in the presser bar ③. Fit the thumbscrew ① into the hole. Tighten the thumbscrew ① by turning it clockwise with a screwdriver.

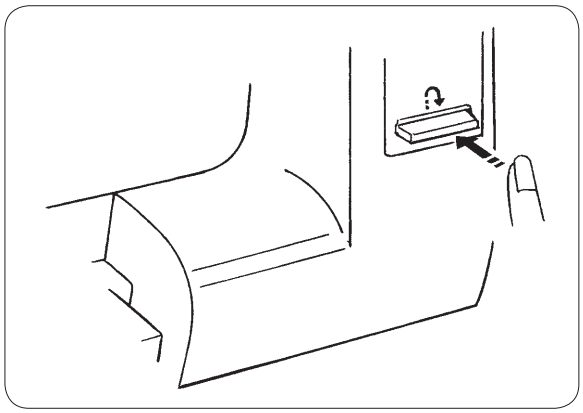

Reverse Stitch Button

As long as you keep the revers e stitch button depressed, the machine sews backwards.

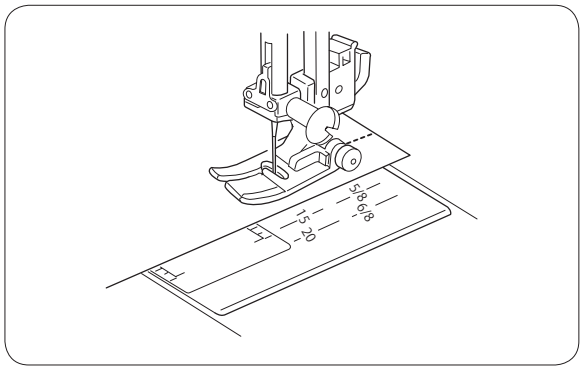

Seam Guide Line

As loThe numbers on the needle plate indicate the distance between the left needle position and the line.
The numbers in the front indicate in millimeters.
The numbers in the back indicate in inches.

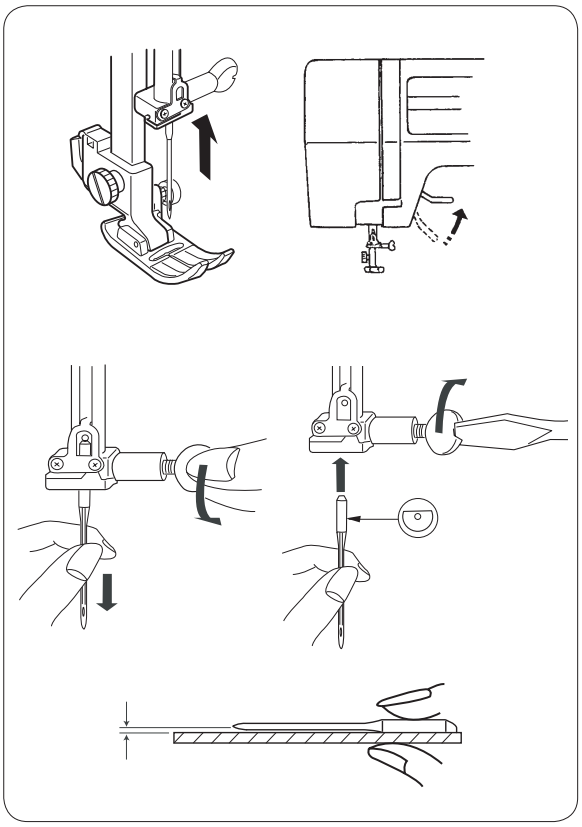

Changing Needle

⚠ CAUTION:
Turn the power switch off before replacing the needle.

Raise the needle by turning the handwheel toward you and lower the presser foot.
Turn off the power switch.

Loosen the needle clamp screw by turning it counter-clockwise.

Remove the needle from the clamp.

Insert the new needle into the needle clamp with the flat side away from you.
When inserting the needle into the clamp, push it up as far as it will go and tighten the clamp screw firmly with the screwdriver.

* Check your needles frequently for barbed or blunted points.A damaged needle can cause permanent snags or runs in knits, fine silks and silk-like fabrics.

Fabric		Thread	Needle
Fine	Lawn Georgette Tricot Organza Crepe	Silk #80-100 Cotton #80-100 Synthetic #80-100	#9/65-11/75 Blue tip needle
Medium	Sheeting Jersey Broadcloth Fleece	Silk #50 Cotton #50-80 Synthetic #50-80	#11/75-14/90
Heavy weight	Denim Tweed Coating Quilting	Silk #30-50 Cotton #40-50 Synthetic #40-50	#14/90-16/100

NOTE:
1 x blue tip needles (#11/75), 2 x #11/75 needles and 2 x #14/90 needles are included in the needle case (Part No. 540401026).

Fabric, Thread and Needle Chart

- For general sewing, use needle size 11/75 or 14/90.
- A fine thread and needle should be used for sewing lightweight fabrics, so the fabric will not be marred.
- Heavy fabrics require a needle large enough to pierce the fabric without fraying the needle thread.
- Always test the needle size on a small scrap of the fabric that will be used for actual sewing.
- In general, use the same thread for the needle and bobbin.
- When sewing stretch fabrics, very fine fabrics and synthetics, use a blue tip needle. The blue tip needle effectively prevents skipped stitches.

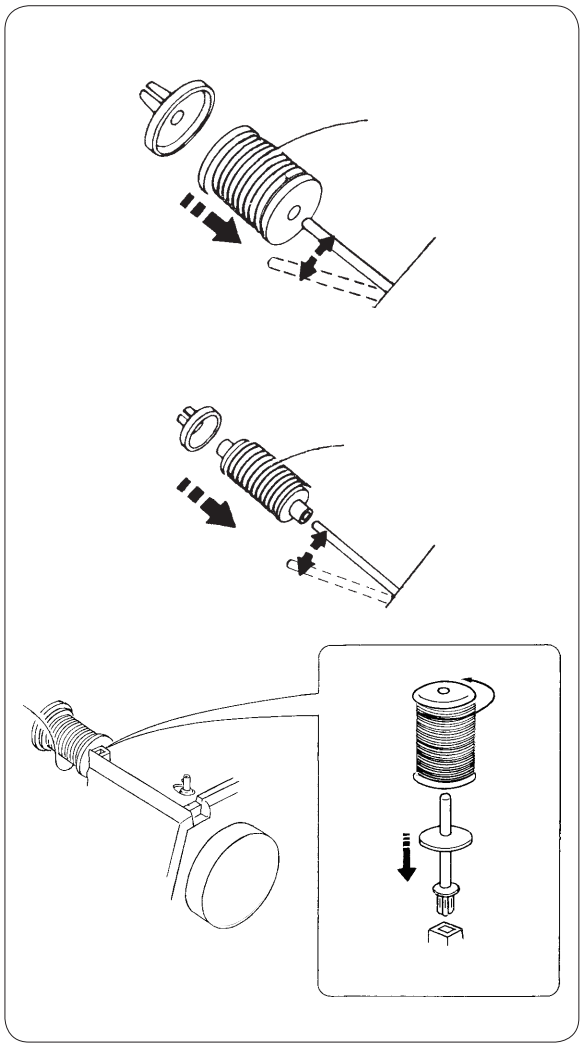

Winding the Bobbin

Horizontal Spool Pin

Lift up the spool pin. Place the spool of thread on the spool with the
thread coming off the spool as shown.
Attach the large spool holder pressing it firmly against the thread spool.

* The small spool holder is used with narrow or small thread spools.

Additional Spool Pin

The additional spool pin is used to wind extra bobbins without unthreading the machine.
To use, insert the additional spool pin in the hole.
Place the felt and the spool on the pin.

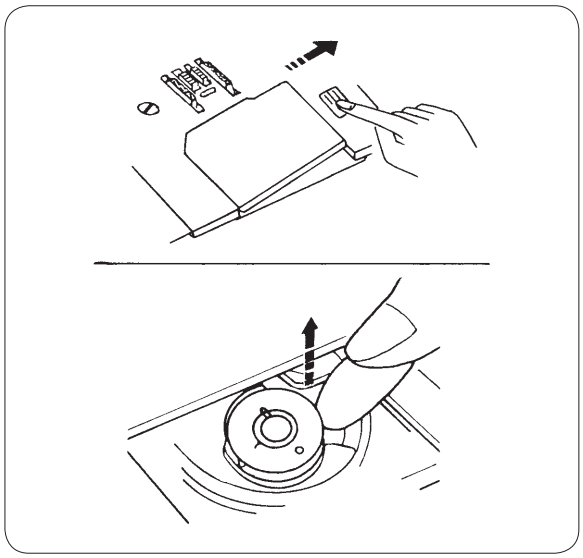

Removing the Bobbin

Gently slide the hook cover plate release button to the right, and remove the cover plate.
Lift out the bobbin.

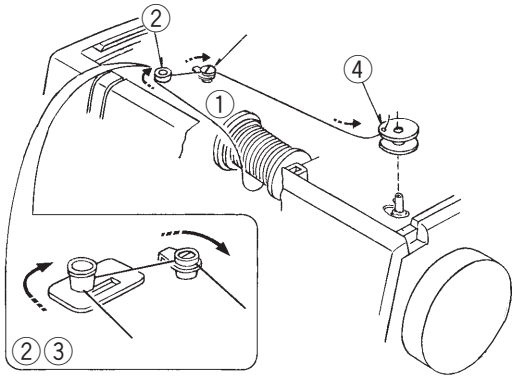

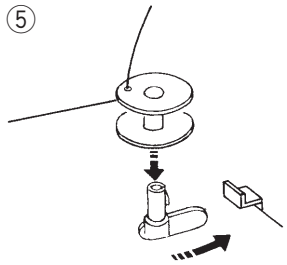

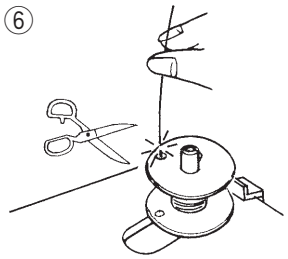

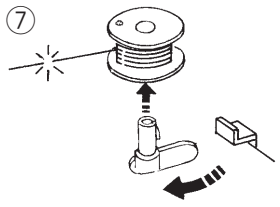

Threading the Bobbin Winder

① Draw the thread from the spool.

② Guide the thread around the thread guide.

③ Guide the thread around the bobbin winder thread guide.

④ Insert the thread through the hole the bobbin, threading from the inside to the outside.

⑤ Put the bobbin on the bobbin winder spindle, and push it to the right.

⑥ With the free end of the thread held in your hand, depress the foot control.
Stop the machine when it has made a few turns, and cut the thread close to the hole in the bobbin. Depress the foot control again. When the bobbin is fully wound, it will sotp automatically.

⑦ Return the bobbin winder to its original position by moving the spindle to the left, and cut the thread as shown.

* The machine will not sew untill the bobbin winder spindle has been returned to the left.

Inserting the Bobbin

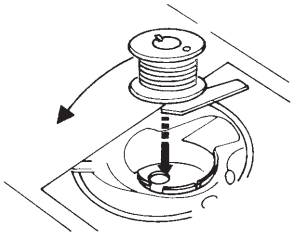

Place the bobbin in the bobbin holder with the thread running counter-clockwise.

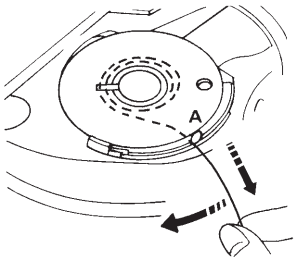

Guide the thread into the notch A on the front side of the bobbin holder. Draw the thread to the left sliding it between the tension spring blades.

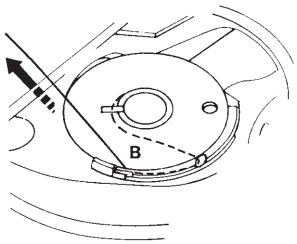

Continue to draw the thread lightly until the thread slips into notch B.

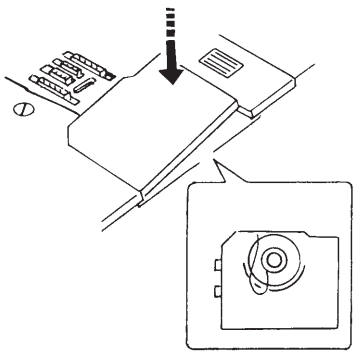

Pull out about 15 cm (6˝) of thread and attach the hook cover plate.

Threading the Machine

Raise the take-up lever to its highest position by turning the handwheel toward you.

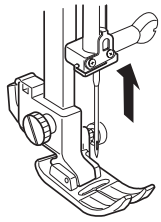

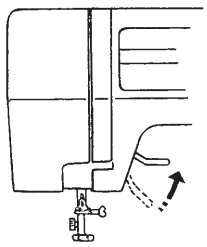

Raise the presser foot with the presser foot lifter and thread in the order from ① to ⑤.

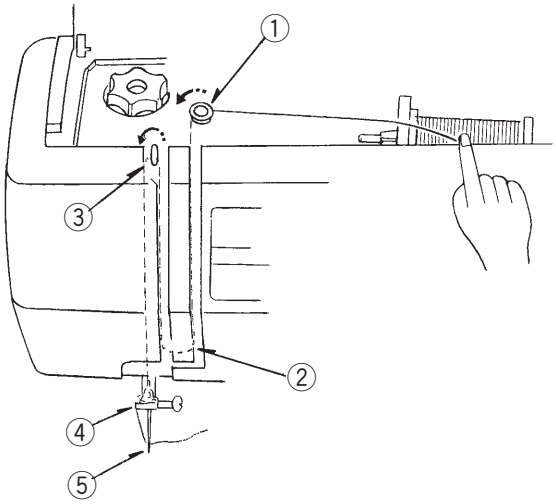

① Lead the thread from the spool and pass it through the thread guide. Then draw it down along the right slot.

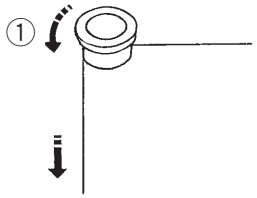

② Guide the thread around the bottom of the thread guide plate from right to left, then draw it upward.

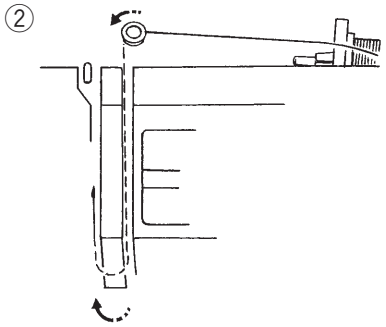

③ Firmly draw the thread from right to left over the take-up lever and down into the take-up lever eye.

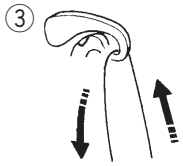

④ Then guide it down along the left slot.

⑤ Slide the thread from the left behind the needle bar therad guide.
Thread the needle.

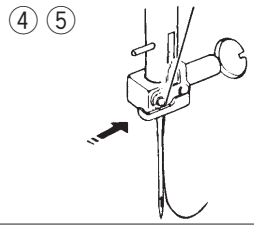

Needle Threader

Lower the presser foot. Raise the needle to its highest position.
Pull down the needle threader knob as far as it will go.
① Threader knob

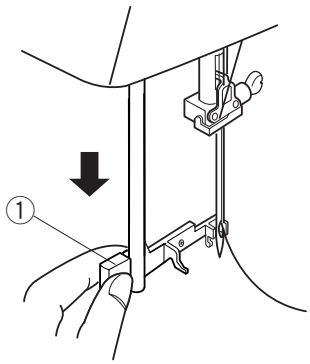

Turn the knob in the direction of the arrow in the illustration, then insert hook into the needle eye.
The hook comes out through the needle eye from behind. Paying close attention to the needle point, draw the thread around the guide and under the hook.
② Hook
③ Guide

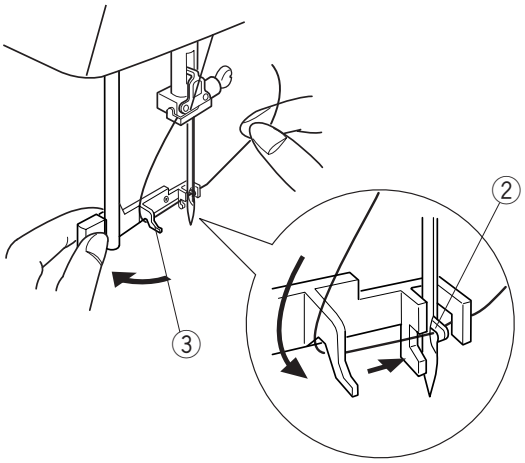

Turn the knob in the direction of the arrow in the illustration, drawing the thread loop through the needle. Gently let the threader goes up to pull the thread loop up.

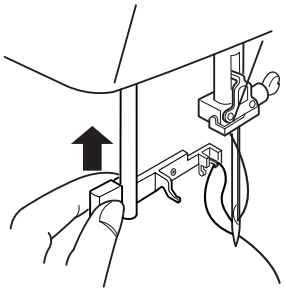

Pull the thread through the needle eye.

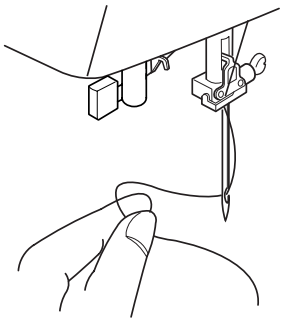

NOTE:
The needle threader can be used with a #11 to #16 needle or a blue tipped needle.
Thread size 50 to 90 should also work well.

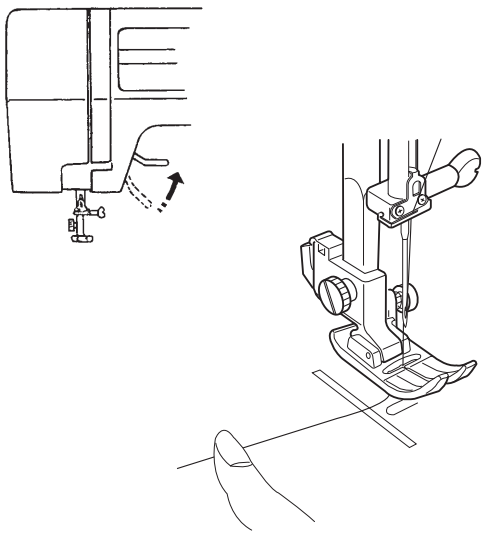

Drawing Up Bobbin Thread

Raise the presser foot and hold the needle thread lightly with your left hand.

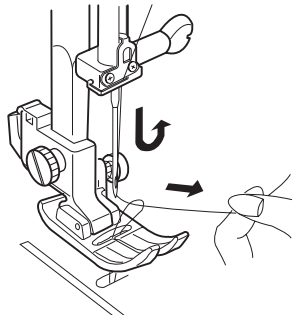

Turn the handwheel slowly towards you with your right hand until the needle goes down and continue turning handwheel until the take-up lever is at its highest position.
Lightly draw up the needle therad forming a loop of bobbin thread.

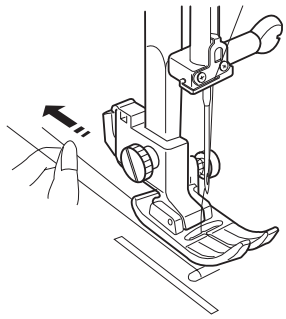

Pull 15 cm (6˝) of both threads back and under the presser foot.

Balancing Needle Thread Tension

The needle thread and the bobbin thread should interlock in the center of two layers of fabric in straight seams.

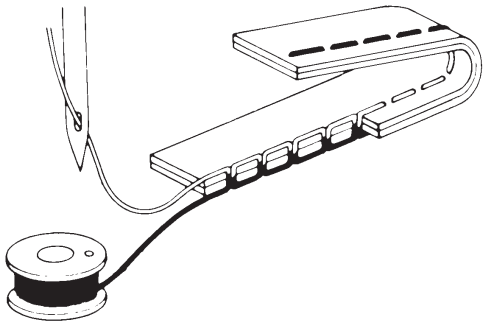

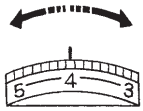

Set the desired number of the thread tension dial at setting mark.

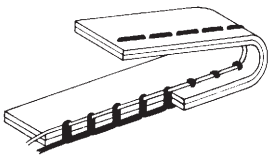

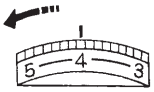

Loosen the needle thread tension by moving the dial to a lower number.

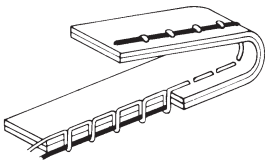

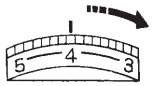

Tighten the needle thread tension by moving the dial to a higher number.

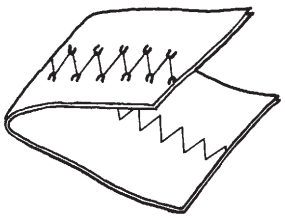

Thread Tension for Zigzag Sewing

To obtain better zigzag stitches, the needle thread tension should be slightly weaker than in the case of straight sewing.
The needle thread should appear slightly on the reverse side of the fabric.

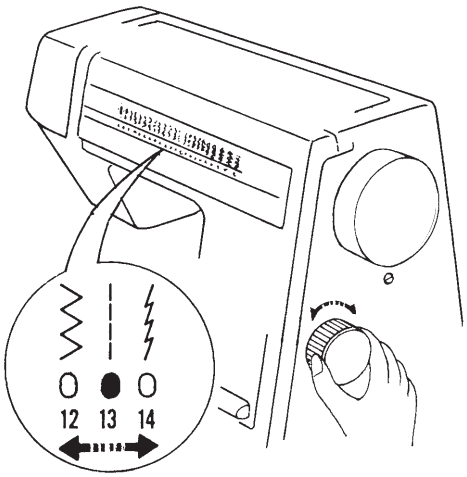

Pattern Selector Dial

Select the pattern by turning the pattern selector dial and the red signal shows the selected pattern.

*Raise the needle above the fabrics and presser foot when you turn the pattern selector dial.

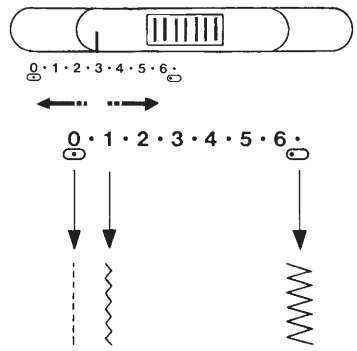

Zigzag Width Control

Higher the number, wider the stitch width.

This machine will sew the maximum 6.5mm (0.25˝) wide zigzag.

*Raise the needle above the fabrics when you set the stitch width.

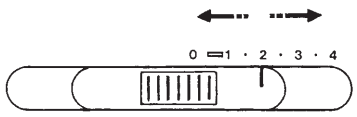

Stitch Length Control

The higher the number, the longer the stitch length. You can select the suitable stitch length for fabrics that you plan to sew.

NOTE:
Stitch length is automatically set for stretch stitch pattern on pattern number 14 to 18.

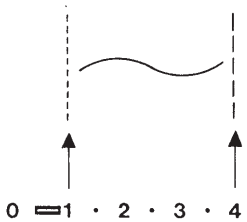

Variable Needle Position

When pattern number 13 is selected, you can move the needle between center and left needle positions.

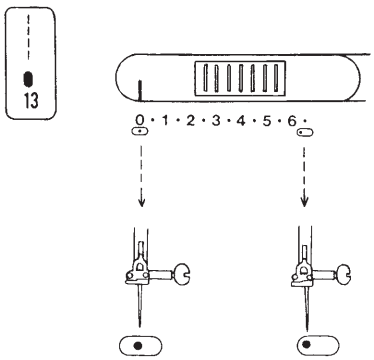

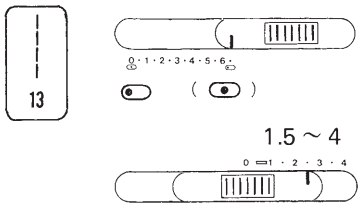

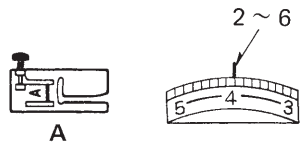

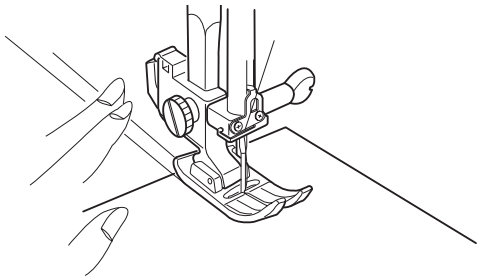

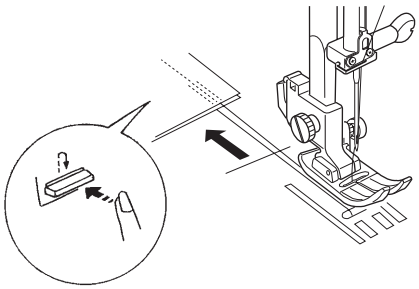

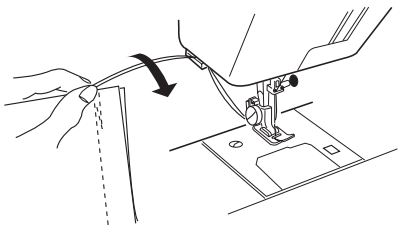

SECTION III
BASIC SEWING

Straight Stitch Sewing

Raise the presser foot and position the fabric next to a stitching guide line on the needle plate.

Lower the presser foot and smooth the threads toward the back. Depress the foot control.

Gently guide the fabric along the guide line letting the fabric feed naturally.

For fastening the ends of seams, press the reverse stitch button and sew several reverse stitches.

Raise the presser foot and remove the fabric, drawing the threads to the back.

The threads are cut the proper length for starting the next seam.

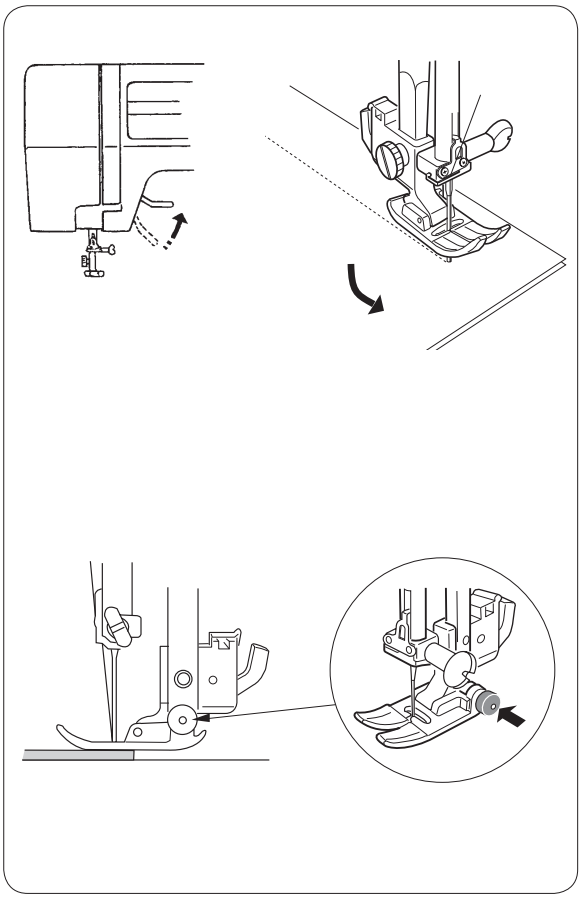

Changing the Sewing Directions

Stop the machine and bring the needle down into the fabric by turning the handwheel.
Raise the presser foot.

Pivot the fabric around the needle to change sewing direction as desired.
Lower the presser foot.

Straight Stitching on Heavy Fabrics

Lower the needle info the fabric at the point where you wish to start sewing.
Press the small black button on the zigzag foot with your left hand to “lock” the presser foot to the fabric.

Lower the presser foot with your right hand, keeping pressure on the black button with your left hand.

Release the black button and start sewing.

SECTION IV
UTILITY STITCHING

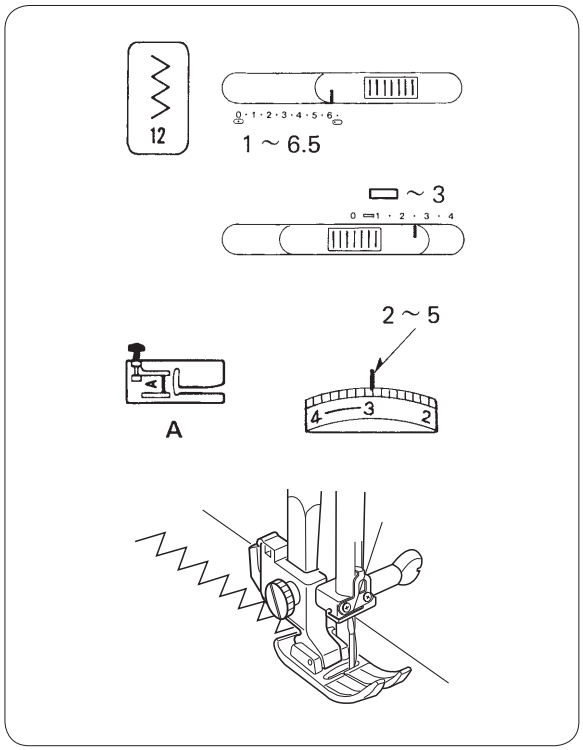

Zigzag Stitch

Simple zigzag stitch is widely used for overcasting, applique, sewing on buttons, etc.

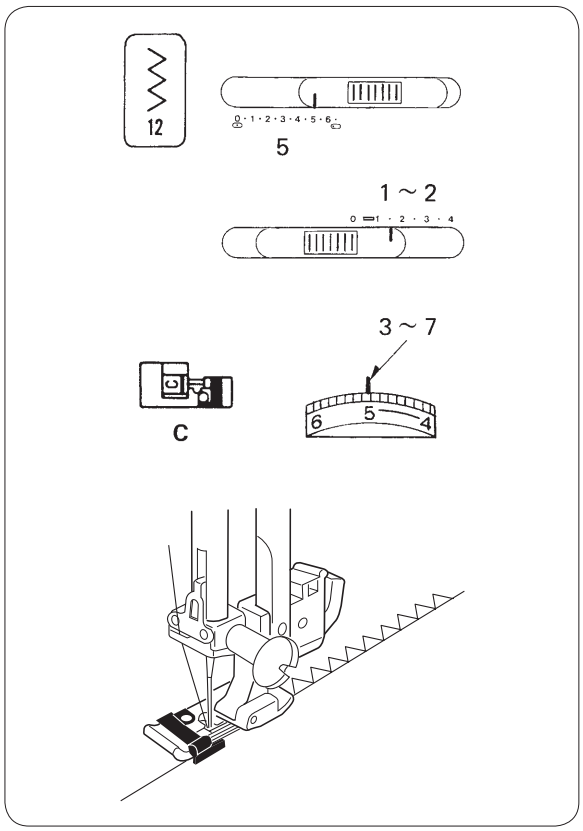

Overcasting

This type of stitch is used on the seam allowance to prevent fabrics from fraying at raw edges.
It can be used to finish a hem edge.
Place the edge of the fabric next to the black prong of foot C.

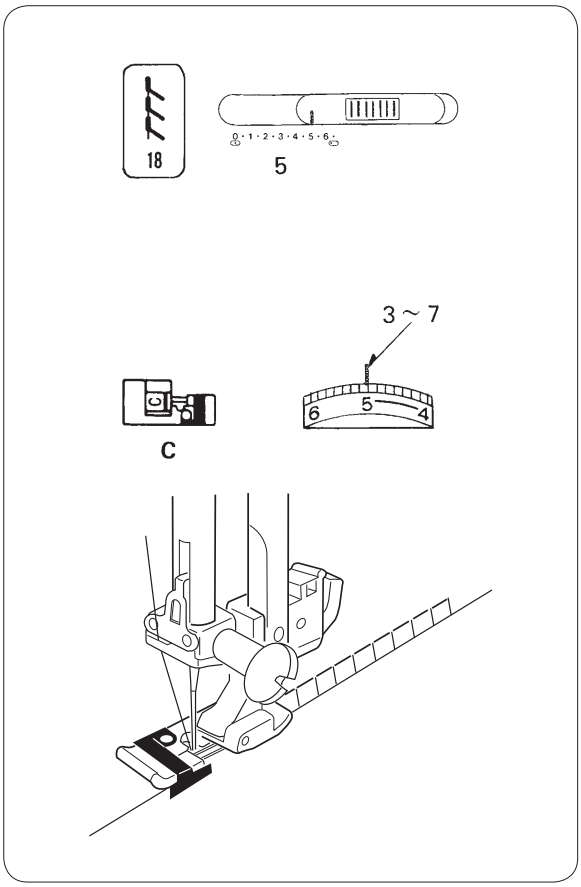

Overedge Stitch

Place the edge of the fabric next to the black prong of foot.
The wires on this foot prevent light weight fabric from rolling and creating a ridge.
The black prong guides your sewing so the needle falls off the fabric wrapping the threads around the edge to stop raveling.

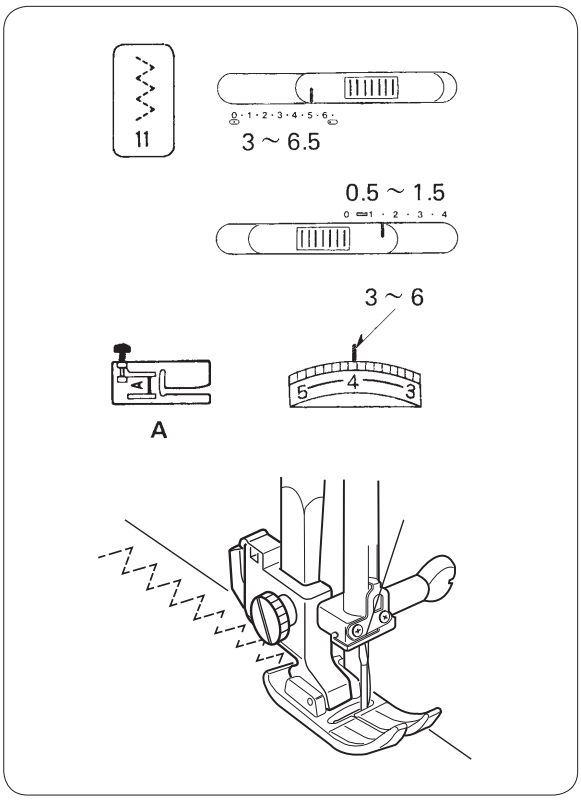

Tricot Stitch

Place the fabric under the presser foot so that the edge will be slightly inside the right hand side of the presser foot.
Guide the work so the right hand stitches fall at the edge of the fabric.

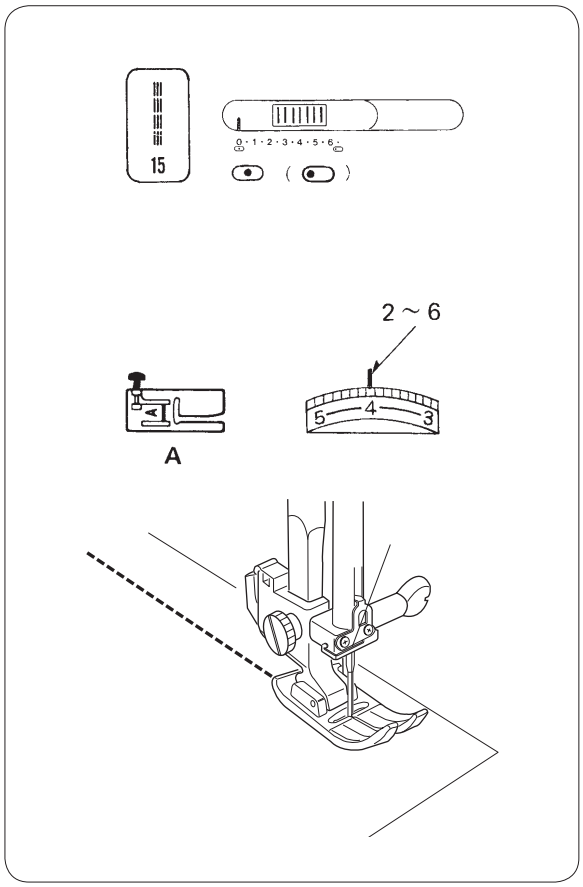

Triple Strength Stitch

This strong, durable stitch is recommended where both elasticity and strength are needed to insure comfort and durability.

Use it to reinforce areas such as crotch and armhole seams.

Also use when constructing items such as backpacks for extra strength.

The stitch is sewn with two stitches forward and one stitch backward forming a seam that does not rip easily.

Garments should be basted for fitting before seaming.

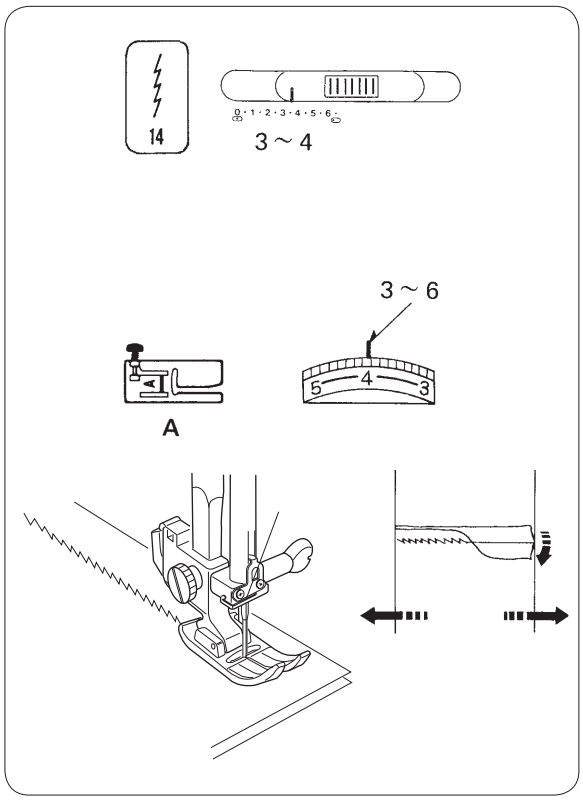

Outline Stretch Stitch

Pattern 14 is a narrow stretch stitch designed to eliminate puckering on knit fabrics and bias seams, while permitting the seam to be pressed completely flat.

For a 1.5 cm (5/8″) seams, use the 2 cm (6/8″) marking on the needle plate.
When sewing light weight fabrics, set the pressure dial at “1” or “2”.



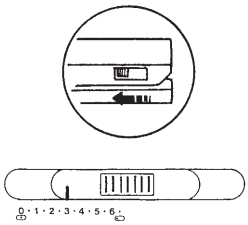

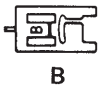

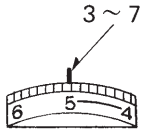

Sewing Buttons

Tape the button over the placement mark.
A pin can be placed on top of the foot to from a shank.
Before lowering the foot, test the needle swing making sure the needle drops in each hole.
Adjust the stitch width if necessary.
Lower the foot.

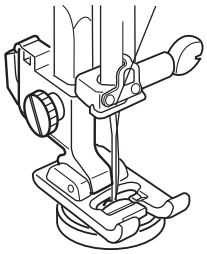

Align the both holes of button with the needle swing, lower the foot and depress the foot control.

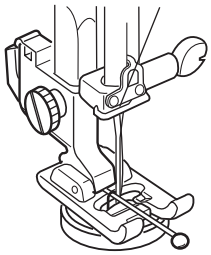

To strengthen the shank, cut the threads leaving a 20 cm (8″) tail.
Bring the needle thread down through the hole in the button and wind it around the shank.
Draw the thread to the wrong side of fabric and knot.

*When button sewing is finished, return the drop feed lever.

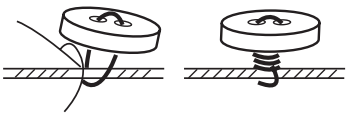

Automatic Buttonhole



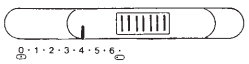

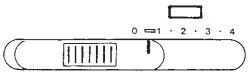

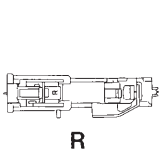

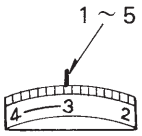

*The size of buttonhole is automatically set by placing the button in the automatic buttonhole foot (R).

*The button holder of the foot takes a button size up to
2.5 cm (1˝) in diameter.

*Make a test buttonhole on a sample duplicating the fabric, interfacing and seams of the actual garment.

*Place the button on the fabric sample and mark the top and bottom to determine the position of buttonhole.

*Use the interfacing on the stretch fabrics.

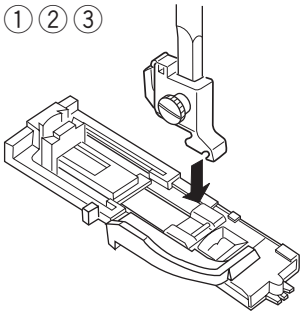

① Turn the handwheel toward you to raise the needle to its highest position.
Raise the presser foot lifter.

② Set the pattern indicator at “BH” by turning the pattern selector dial.

③ Attach the automatic buttonhole foot (R).

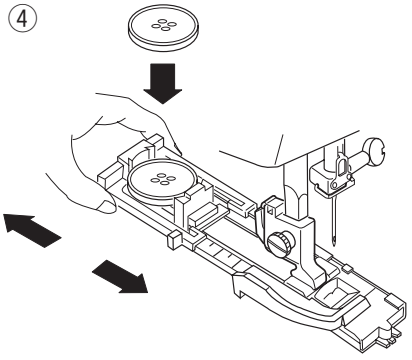

④ Pull the button holder to the back, and place the button in it.
Push back the button holder toward you as far as it will go.

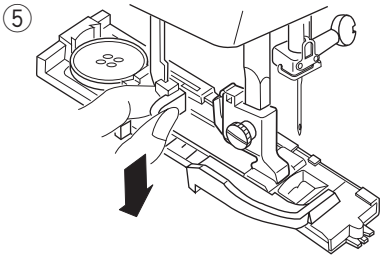

⑤ Pull the buttonhole lever downward as far as it will go.

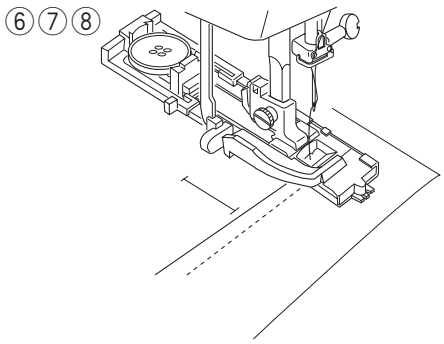

⑥ Insert the fabric under the foot.
Turn the handwheel one complete turn by your hand.

⑦ Remove the fabric to the left to draw both threads to the left.

⑧ Insert the garment under the foot, and lower the needle at the starting point.
Then lower the automatic buttonhole foot.

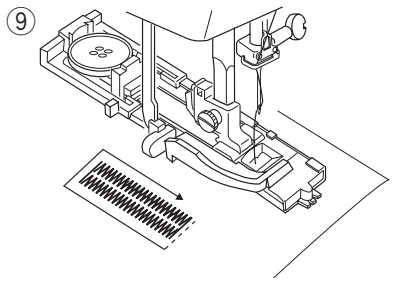

⑨ Sew slowly and stop the machine at the starting point when a buttonhole is completed.

*The machine sews front bartack and left row first, then the back bartack and right row.

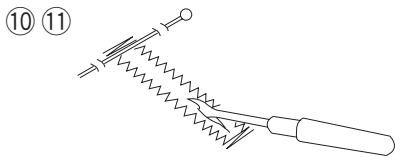

⑩ Cut the both needle and bobbin threads leaving about 10 cm (4″) thread ends.
Draw the needle thread to wrong side of fabric by pulling the bobbin thread.
Then, knot the threads.

⑪ Insert a pin inside the bartack.
Then cut the opening with a seam ripper.
Take care not to cut the stitches.

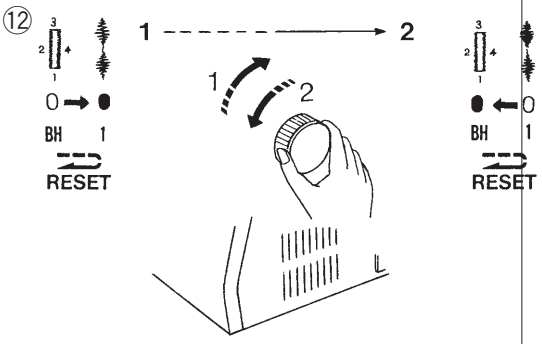

⑫ To repeat buttonhole sewing.
After a buttonhole is sewn, move the indicator to pattern “1” [ ] by turning the pattern selector dial in the direction of arrow 1, then return the indicator back to “BH” by turning the dial in the direction of arrow 2 to reset for sewing the next buttonhole.

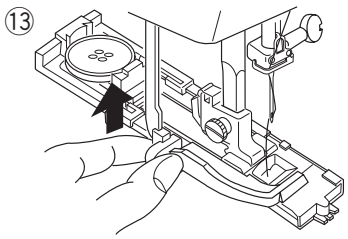

⑬ When buttonhole sewing is finished, push the buttonhole lever upward as far as it will go.

Manual Buttonhole

If the diameter of the button is more than 2.5 cm (1″), a buttonhole must be made manually as follows:

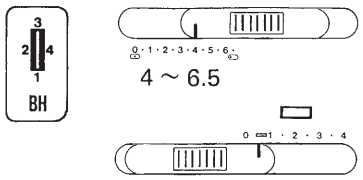

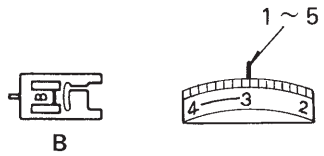

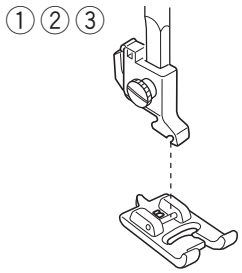

① Turn the handwheel toward you to raise the needle to its highest position. Raise the presser foot lifter.

② Set the pattern indicator at “BH” by turning the pattern selector dial.

③ Attach the buttonhole foot (B).

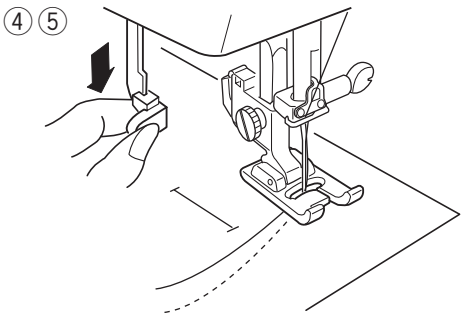

④ Pull the buttonhole lever downward as far as it will go.

⑤ Lower the needle into the garment where the buttonhole is to start, and lower the foot.

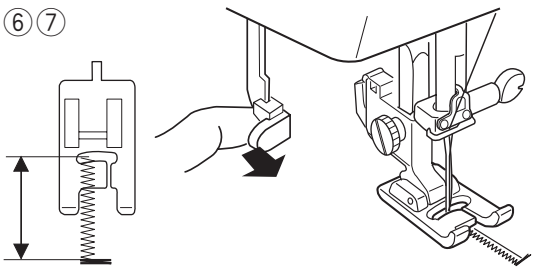

⑥ Sew the front bartack and left row, then stop the machine after sewing the desired total length of buttonhole.

⑦ Pull the buttonhole lever toward you.

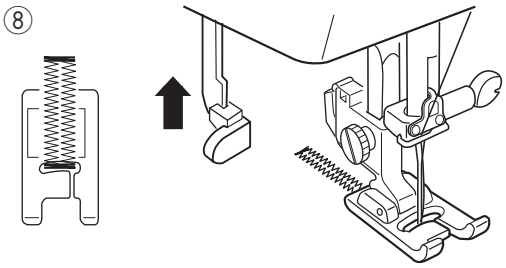

⑧ Sew the back bartack and right row, then stop the machine at the starting point.
To cut the opening and to reset for sewing the next buttonhole, refer to the instructions on page 31.

Corded Buttonhole

*Set the stitch width in accordance with the thickness of the cord used.

*To cut the opening and to reset for sewing the next buttonhole, refer to the instructions on page 31.

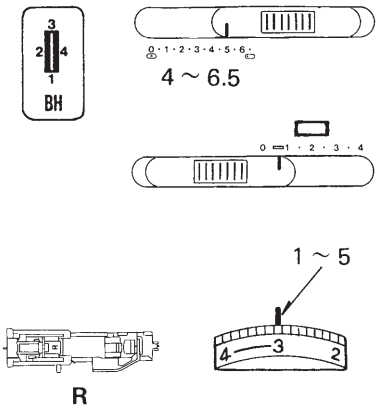

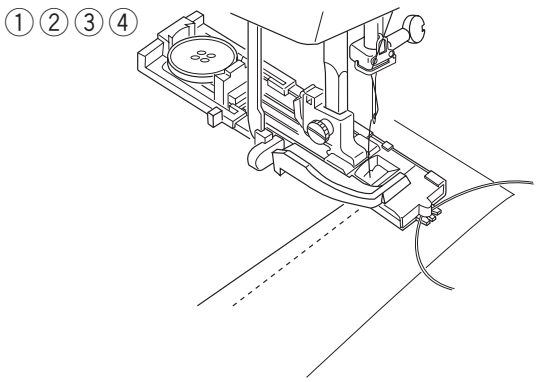

① With the buttonhole foot raised, hook the filler cord on the cord spur at the back of the buttonhole foot.

② Bring the ends toward you under the buttonhole foot until they clear the front end.

③ Hook the filler cord info the forks on the front of the R foot to hold them tight.

④ Lower the needle into the garment where the buttonhole will start and lower the foot.

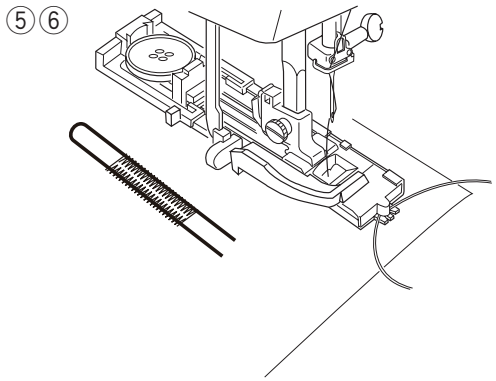

⑤ Depress the foot control gently and sew the buttonhole.
Each side of the buttonhole and the bartacks will be sewn over the cord.

⑥ Remove the fabric from the machine and cut the sewing threads.

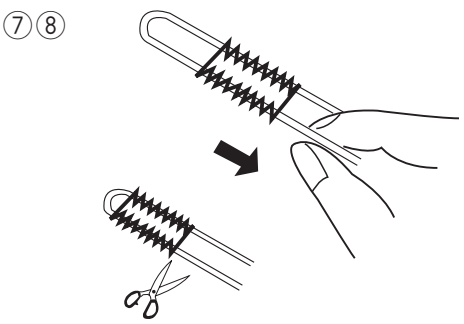

⑦ Pull the left end of the filler cord to tighten it.

⑧ Thread the end through a darning needle, draw to the bottom side of the fabric and cut.

Zipper Application

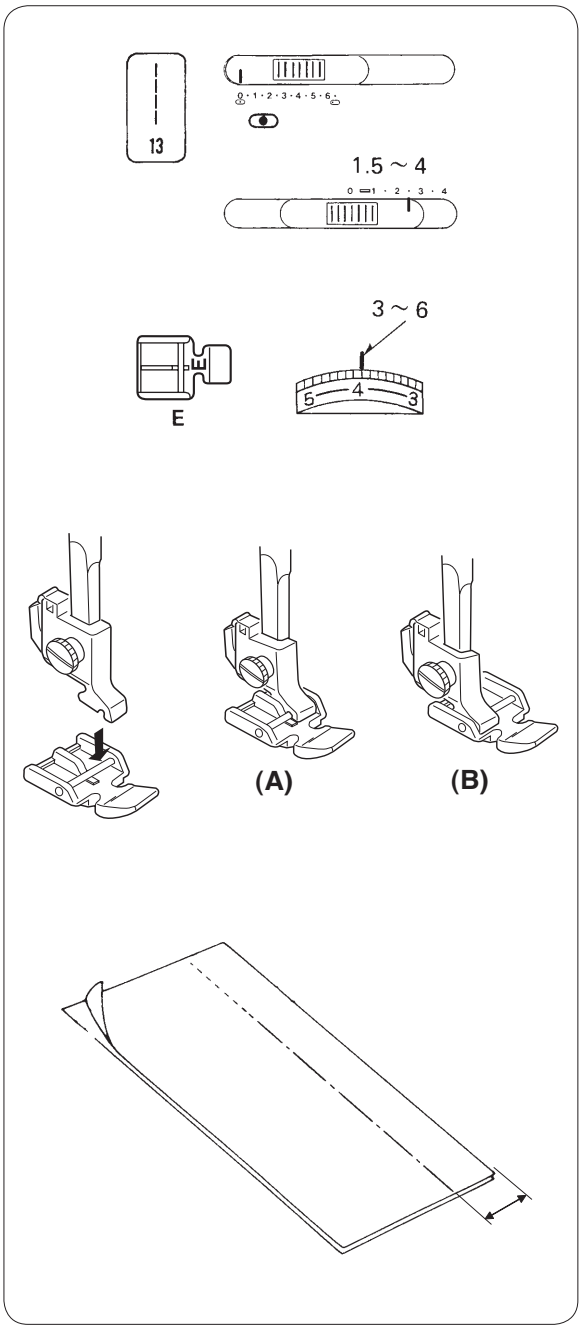

(A) To sew the left side of the zipper, attach the zipper foot to the pin on the right hand side.

(B) To sew the right side of the zipper, attach the zipper foot to the pin on the left hand side.

Fabric Preparation:

Place right sides of fabric together and sew to the end of the zipper opening.
Reverse stitch to knot the stitches.
Sew the zipper opening with a basting stitch.

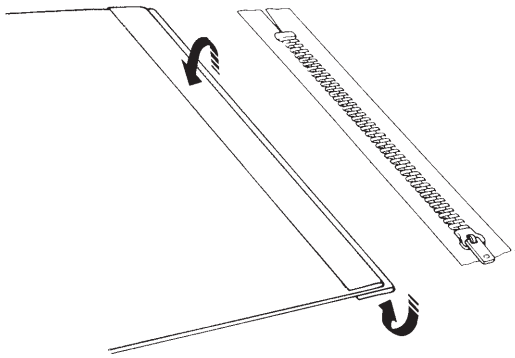

To Sew:

Fold back the left seam allowance.
Turn under the right seam allowance to from a 0.2 to 0.3 cm (1/8˝) fold.

Place the zipper teeth next to the fold and pin in place.

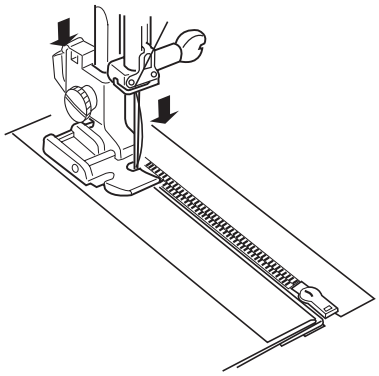

Attach the zipper foot with the pin on the right hand side.
Lower the zipper foot.

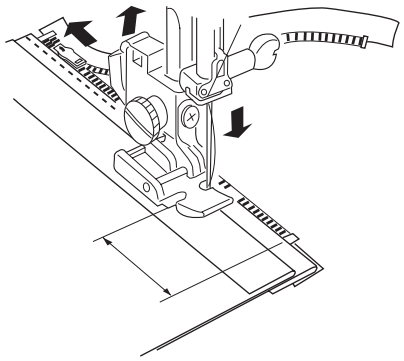

Sew through fold and zipper tape.
Stop just before the zipper foot reaches the slider on the zipper tape.

Turn the handwheel by hand and lower the needle info the fabric.
Raise the zipper foot and open the zipper.
Lower the foot and stitch the remainder of the seam.

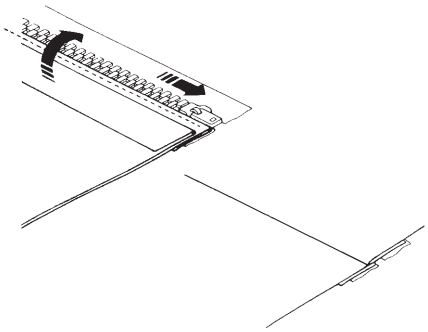

Close the zipper and spread the fabric flat with the right side facing up.

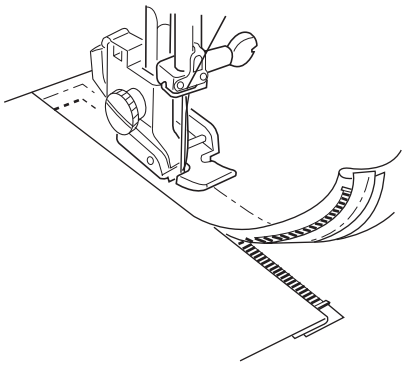

Move the zipper foot to the left pin.
Guide the edge of the foot along the zipper teeth and stitch through garment and zipper tape.
Stop about 5 cm (2″) from the top of the zipper.

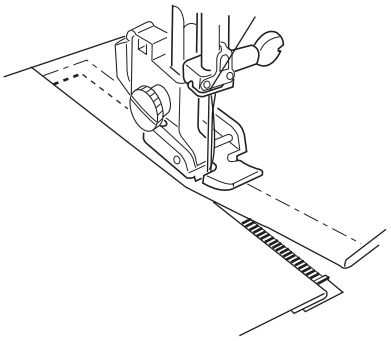

With the needle down in the fabric, raise the foot, remove the basting stitches and open the zipper. Then lower the foot and stitch the remainder of the seam making sure the fold is even.

Rolled Hem

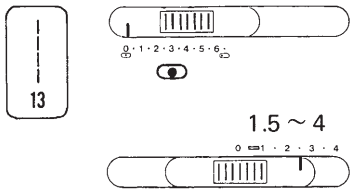

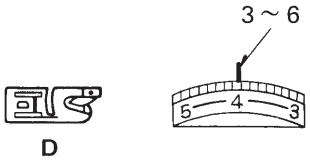



Make a double 0.25 cm (1/8″) fold approximately 8 cm (3″) in length.

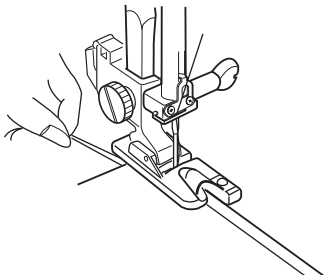

Lower the needle into the fabric at the point where sewing is to begin, then lower the hemmer foot.

Sew 3 or 4 stitches while pulling the needle and bobbin threads.

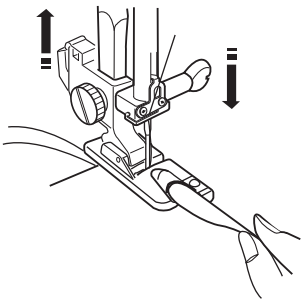

Lower the needle into the fabric and lift the hemmer foot. Insert the folded portion of the fabric into the curl of the hemmer foot.

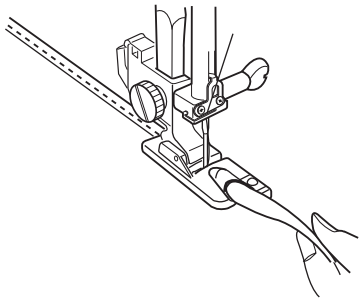

Lower the hemmer foot, then sew by lifting up the edge of the fabric to keep it feeding smoothly and evenly.

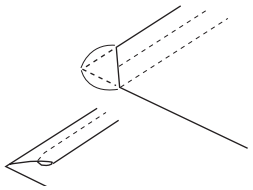

Trim about 0.6 cm(1/4″) from corners as illustrated, to reduce bulk.

Blind Stitch Hemming

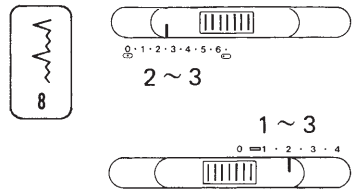

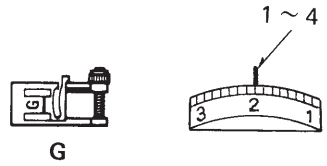

G

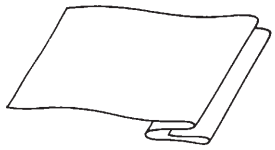

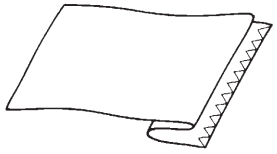

On lightweight fabrics the raw edge can be turned under and pressed.
On heavy weight fabrics that ravel, the raw edge should be overcast first.

Fold up the hem the desired amount and pin in place.

Then fold the hem under the fabric as illustrated.

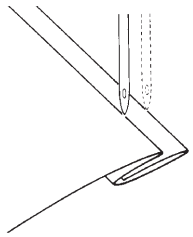

Position the fabric on the machine so that the needle just pierces the folded part of the fabric when the needle comes over to the extreme left side.

Lower the presser foot.

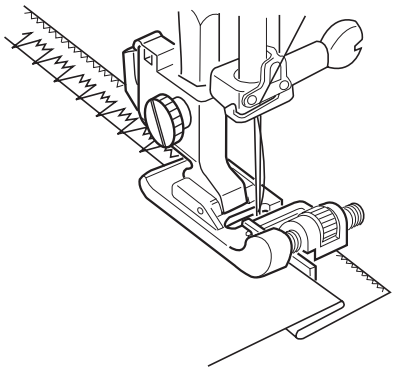

Turn the guide screw and move the sliding guide next to the folded edge. Sew guiding the folded edge along the sliding guide.

SECTION V
DECORATIVE STITCHING

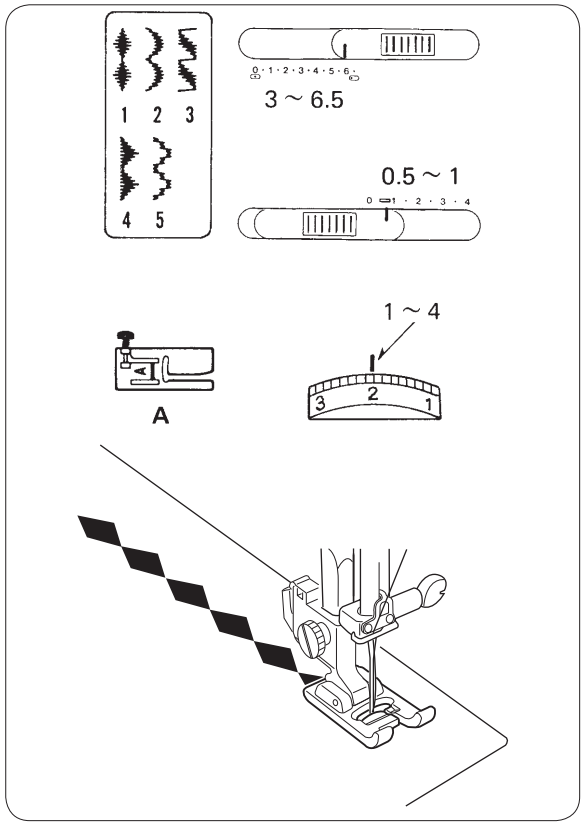

Decorative Satin Stitch Patterns

Sew a row of stitches and adjust the thread tension so the needle thread should appear on the reverse side of the fabric.
Test the stitch on the actual fabric for the best results.

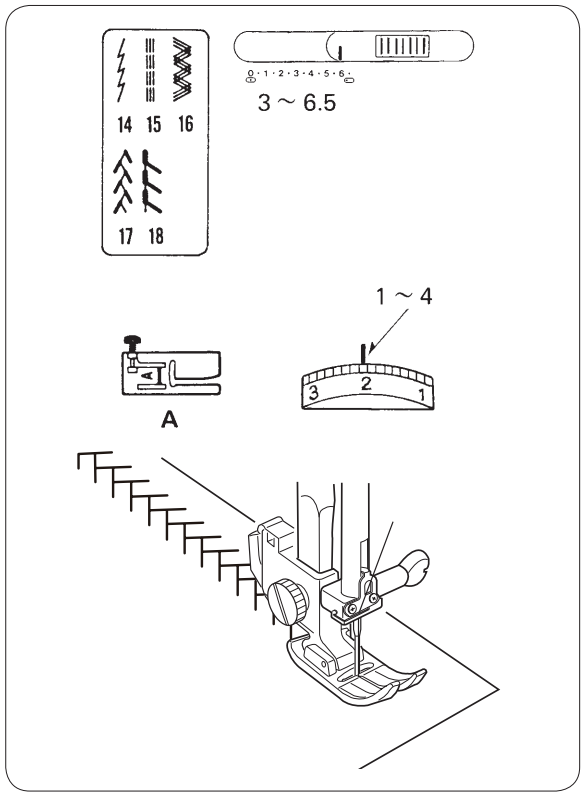

Stretch Stitch Patterns

Stitch length of the automatic patterns (No.14 to 18) are preset, so you do not need to select the stitch length for these patterns.

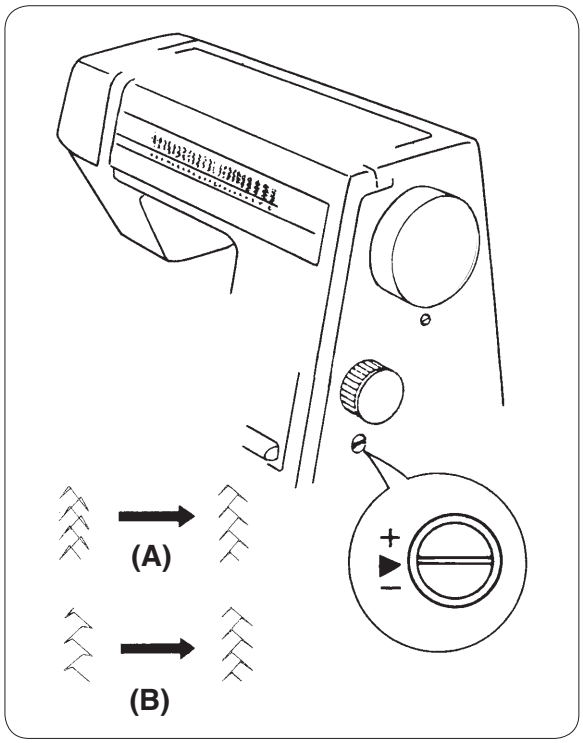

Adjusting Stretch Stitch Balance

If patterns are uneven when sewing with a particular fabric, adjust them with the feed balance dial.

After sewing with an altered dial setting, you must reset the dial to [▶].

(A) When patterns are compressed, correct by turning the dial in the direction of " + ".

(B) When patterns are drawn out, correct by turning the dial in the direction of " – ".

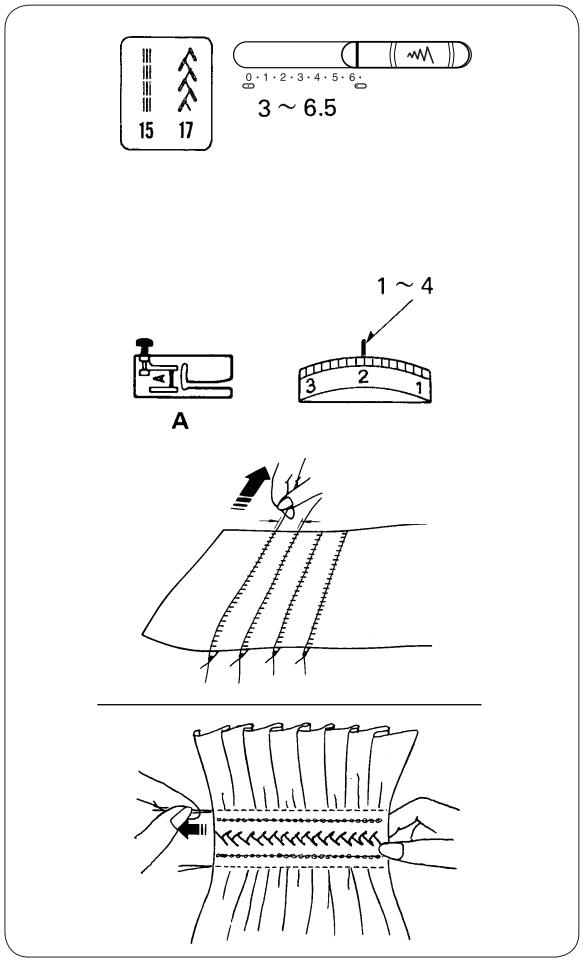

Smocking

With the stitch length control at "4", sew straight lines 1 cm(3/8″) apart across the area to be smocked. Knot the threads along the ege.
Pull the bobbin threads and distribute gathers evenly.
Sew pattern stitches between the straight seams.
Pull out the gathering stitches.

Quilting

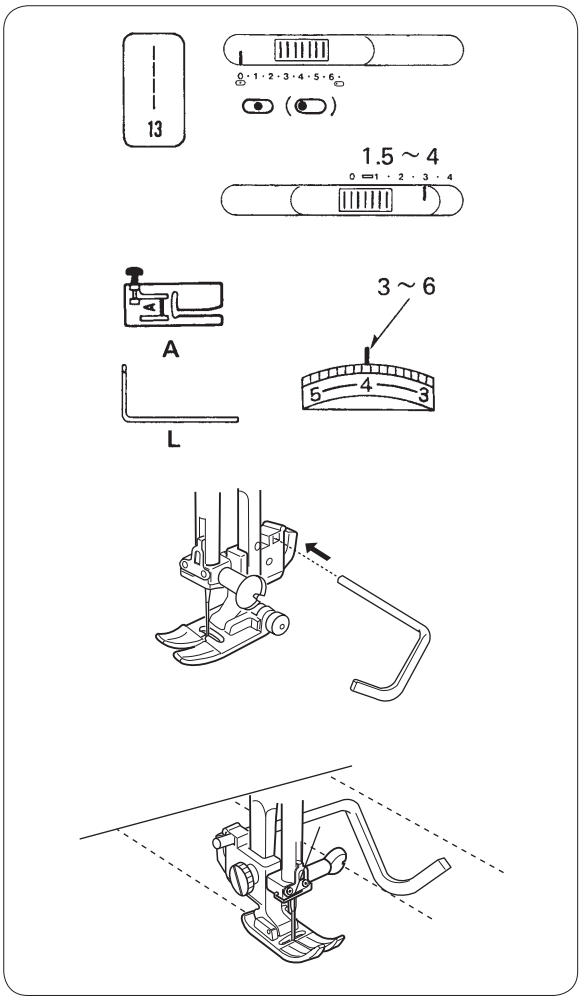

The quilting guide will help to keep the stitching lines straight.
Insert the quilter in the opening, and slide it at the desired width.

Sew guiding the quilter over the previous row of stitching.

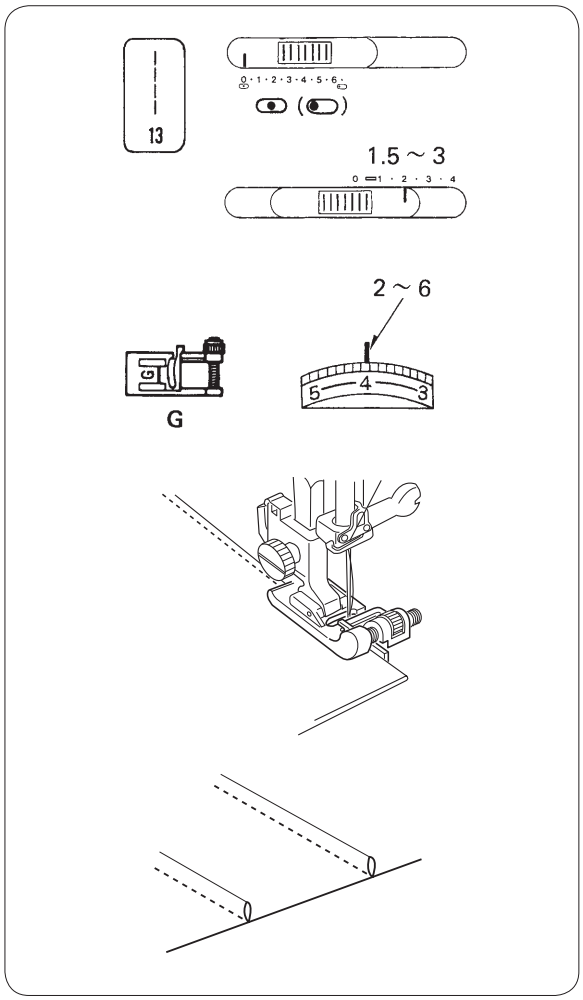

Pin Tucking

Fold the fabric with wrong sides together on the fold line.

Position the fabric so that the needle pierces 0.1 to 0.2 cm (1/16˝) inside of folded part and lower the presser foot.

Turn the guide screw and move the sliding guide next to the folded edge.

Sew guiding the folded edge along the sliding guide.

Press the pin tucks to one side.

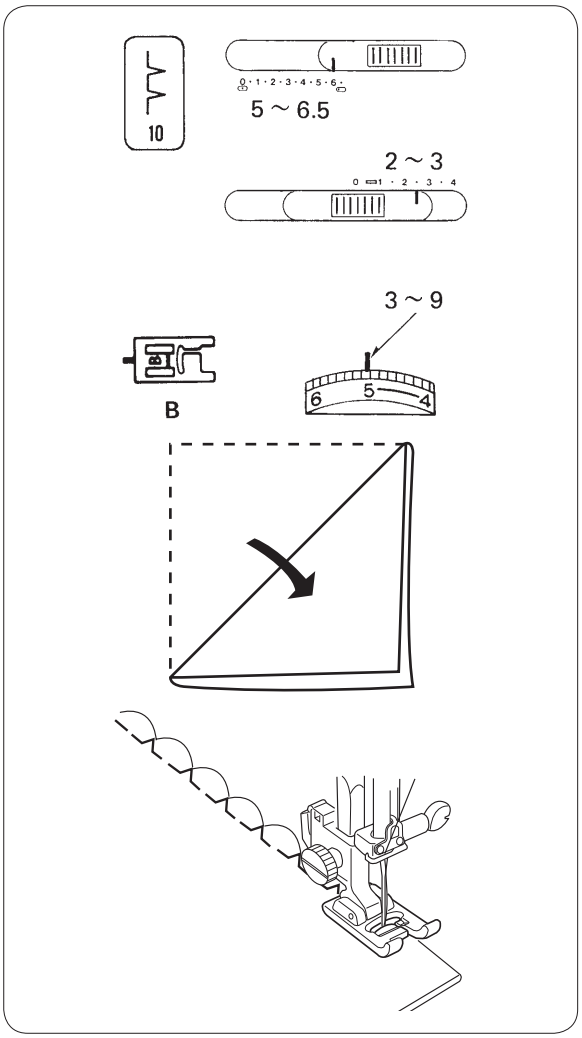

Shell Tuck

Place the folded edge along the slot of foot.
The needle should fall off the edge of the fabric on the right forming a tuck.

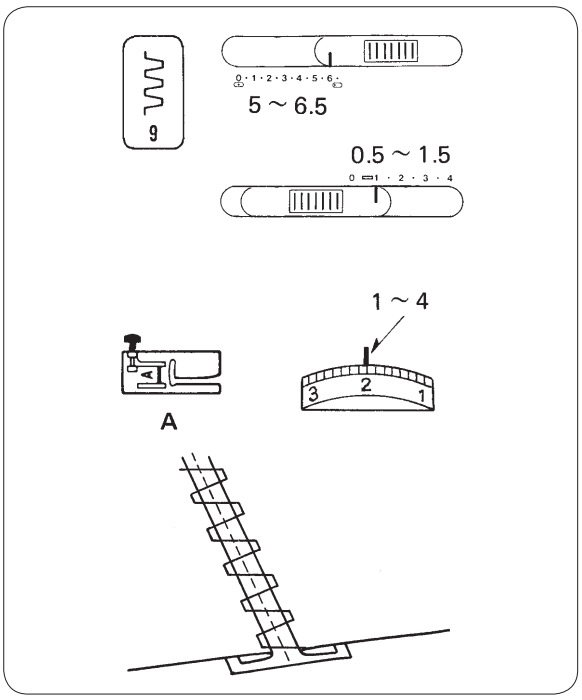

Fagoting

Fold under 1.5cm (1/12″) on each fabric edge and press.
Pin the two edges to paper 0.3cm (1/8″) apart.

Sew slowly guiding the fabric so the needle catches the folded edge on each side.

Peel off the paper from the wrong side of the fabric.

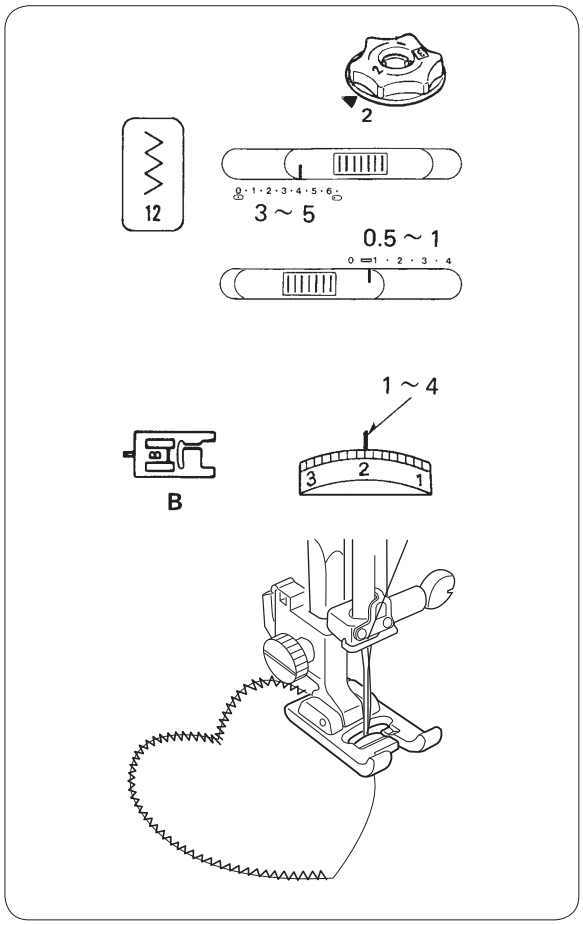

Applique

Baste (or fuse with iron-on fabric joiner) applique pieces on the fabric.
Stitch around the applique making sure the needle falls along the outer edge of the applique.
When sewing corners, lower the needle down into the fabric.
Raise the presser foot and pivot the fabric to the right or left.

*When applique sewing is finished, return the pressure dial to 3.

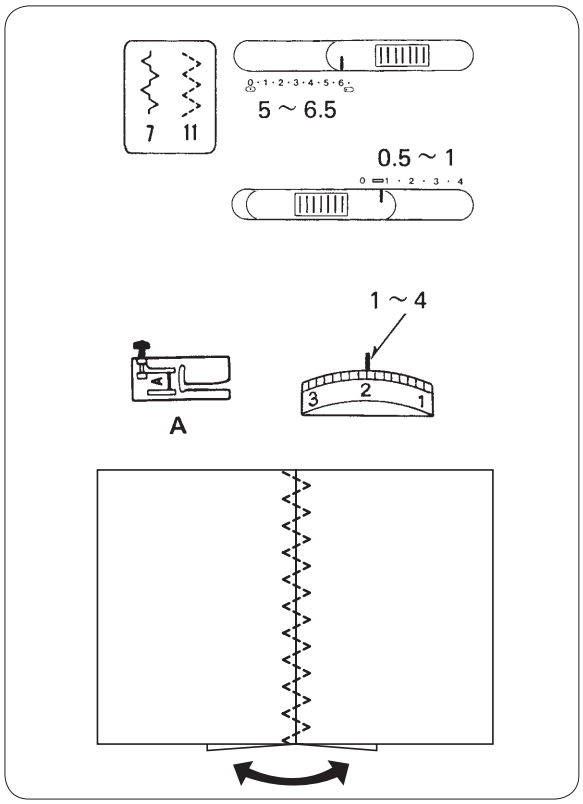

Patch Work

Sew seam and press seam allowance open.
Sew pattern stitch on the right side of garment centering stitches over the seam line.

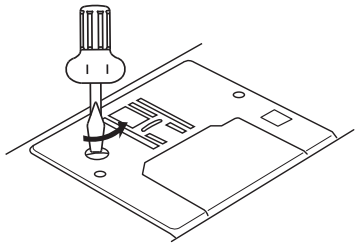

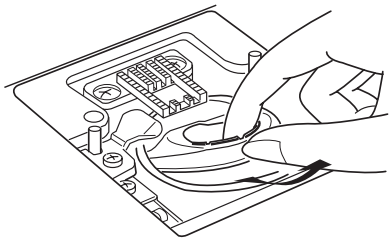

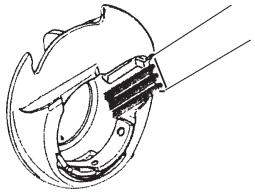

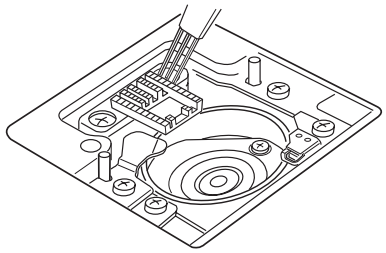

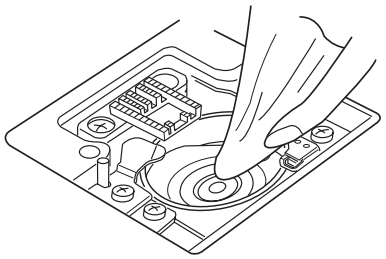

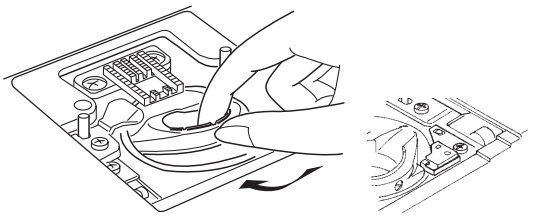

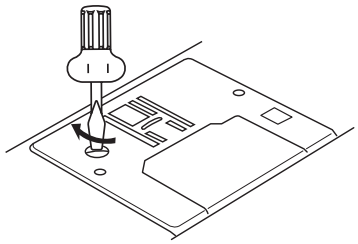

SECTION VI
CARE AND MAINTENANCE

Cleaning the Hook Race

Unplug the machine and remove the presser foot and needle.Remove the screw on the left hand side of the needle plate with the screwdriver. Remove the needle plate.

Take out the bobbin and bobbin holder.
Lift up the bobbin holder and remove it.

Clean the bobbin holder with a lint brush.

Clean the feed dogs, hook race and bobbin holder with the lint brush and a soft dry cloth.

Inserting the Bobbin Holder
Line up the triangle marks and position the bobbin holder so the notch fits next to the stopper in the hook race.

Insert the bobbin.

Attach the needle plate, presser foot and needle.

Trouble Shooting

Condition	Cause	Reference
The machine does not run smoothly and is noisy.	1. Threads have been caught in hook mechanism. 2. The feed dog is packed with lint.	See Page 38 See Page 38
The needle thread breaks.	1. The needle thread is not threaded properly. 2. The needle thread tension is too tight. 3. The needle is bent or blunt. 4. The needle is incorrectly inserted. 5. The fabric is not being drawn to the rear when sewing is finished. 6. The thread is either too heavy or too fine for the needle.	See Page 12 See Page 15 See Page 8 See Page 8 See Page 17 See Page 8
The bobbin thread breaks.	1. The bobbin thread is not threaded properly in the bobbin holder. 2. Lint has collected in the bobbin holder. 3. The bobbin is damaged and does not turn smoothly.	See Page 11 See Page 38 Exchange bobbin.
The needle breaks.	1. The needle is incorrectly inserted. 2. The needle is bent or blunt. 3. The needle clamp screw is loose. 4. The tension of the needle thread is too tight. 5. The fabric is not drawn to the rear when sewing is finished. 6. The needle is too fine for the fabric being sewn. 7. The pattern selector dial has been turned while the needle was in the material.	See Page 8 See Page 8 See Page 8 See Page 15 See Page 17 See Page 8 See Page 16
Skipped stitches.	1. The needle is incorrectly inserted. 2. The needle is bent or blunt. 3. The needle and/or threads are not suitable for the work being sewn. 4. A BLUE TIPPED needle is not being used for sewing stretch, very fine fabrics and synthetics. 5. The needle thread is not threaded properly. 6. The presser foot pressure is not strong enough.	See Page 8 See Page 8 See Page 8 See Page 8 See Page 12 See Page 5

Condition	Cause	Reference
Seam Puckering.	1. The needle thread tension is too tight. 2. The needle thread is not threaded correctly. 3. The needle is too heavy for the cloth being sewn. 4. The stitches are too coarse for the fabric being sewn. 5. The presser foot pressure is not correctly adjusted. *When sewing extremely light weight materials, place a sheet of paper underneath the fabric.	See Page 15 See Page 12 See Page 8 Make the stitches denser. See Page 5
Stitches form loops below the work.	1. The needle thread tension is too loose. 2. The needle is either too heavy or too fine for the thread.	See Page 15 See Page 8
The cloth is not feeding smoothly.	1. The feed dog is packed with lint. 2. The presser foot pressure is too weak. 3. The stitches are too fine. 4. The feed dog is not raised after “Drop feed” has been used.	See Page 38 See Page 5 Make the stitches coarser. See Page 5
The machine does not work.	1. The machine is not plugged in. 2. A thread is caught in the hook race. 3. Bobbin winder spindle is in the winding position.	See Page 4 See Page 38 See Page 10
The buttonhole stitches are not balanced.	1. The stitch length is not suitable for the fabric being sewn. 2. The work is being pulled or held back. 3. Interfacing is not used with stretch fine fabrics.	See Page 23, 25 and 26 Do not force the fabric for guiding. See Page 23