INSTRUCTION BOOK

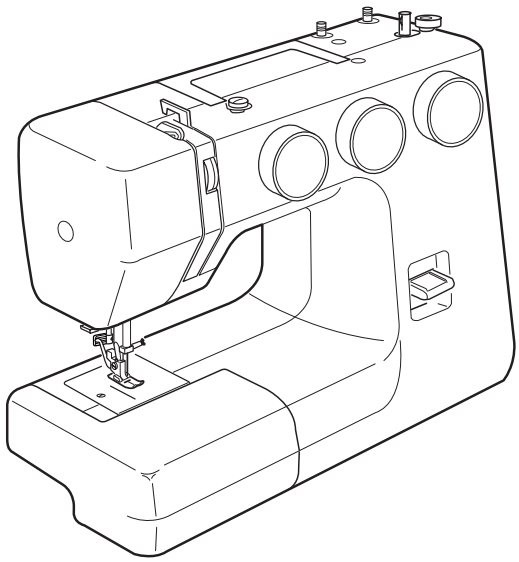

IMPORTANT SAFETY INSTRUCTIONS

When using an electrical appliance, basic safety precautions should always be followed, including the following:

This sewing machine is designed and manufactured for household use only.

Read all instructions before using this sewing machine.

DANGER— To reduce the risk of electric shock:

1. An appliance should never be left unattended when plugged in. Always unplug this sewing machine from the electric outlet immediately after using and before cleaning.

WARNING— To reduce the risk of burns, fire, electric shock, or injury to persons:

1. Do not allow to be used as a toy. Close attention is necessary when this sewing machine is used by or near children.
2. Use this appliance only for its intended use as described in this owner's manual. Use only attachments recommended by the manufacturer as contained in this owner's manual.
3. Never operate this sewing machine if it has a damaged cord or plug, if it is not working properly, if it has been dropped or damaged, or dropped into water. Return this sewing machine to the nearest authorized dealer or service center for examination, repair, electrical or mechanical adjustment.
4. Never operate the appliance with any air opening blocked. Keep ventilation openings of this sewing machine and foot controller free from accumulation of lint, dust and loose cloth.
5. Never drop or insert any object into any opening.
6. Do not use outdoors.
7. Do not operate where aerosol (spray) products are being used or where oxygen is being administered.
8. To disconnect, turn all controls to the off ("O") position, then remove plug from outlet.
9. Do not unplug by pulling on cord. To unplug, grasp the plug, not the cord.
10. Keep fingers away from all moving parts. Special care is required around the sewing machine needle and/or cutting blade.
11. Always use the proper needle plate. The wrong plate can cause the needle to break.
12. Do not use bent needles.
13. Do not pull or push fabric while stitching. It may deflect the needle causing it to break.
14. Switch this sewing machine off ("O") when making any adjustment in the needle area, such as threading the needle, changing the needle, threading the bobbin or changing the presser foot, and the like.
15. Always unplug this sewing machine from the electrical outlet when removing covers, lubricating, or when making any other adjustments mentioned in this owner's manual.

SAVE THESE INSTRUCTIONS

For Europe only:
This appliance can be used by children aged from 8 years and above and persons with reduced physical, sensory or mental capabilities or lack of experience and knowledge if they have been given supervision or instruction concerning use of the appliance in a safe way and understand the hazards involved. Children shall not play with the appliance. Cleaning and user maintenance shall not be made by children without supervision.

For outside Europe (except U.S.A and Canada):
This appliance is not intended for use by persons (including children) with reduced physical, sensory or mental capabilities, or lack of experience and knowledge, unless they have been given supervision or instruction concerning use of the appliance by a person responsible for their safety.
Children should be supervised to ensure that they do not play with the appliance.



Please note that on disposal, this product must be safely recycled in accordance with relevant National legislation relating to electrical/electronic products. If in doubt please contact your retailer for guidance. (European Union only)

TABLE OF CONTENTS

SECTION 1. ESSENTIAL PARTS
Name of Parts 2
SECTION 2. GETTING READY TO SEW
Extension Table 3
Free Arm Sewing 3
Standard Accessories 3
Accessories Storage Box 3
Connecting the Machine to the Power Supply 4
Controlling Sewing Speed 4
Presser Foot Lifter 5
To Attach and Remove the Presser Foot 5
To Attach and Remove the Foot Holder 5
Changing Needle 6
To check the needle 6
Thread and Needle Chart 6
Setting Spool Pins 7
Removing or Inserting the Bobbin Case 7
Winding the Bobbin 8
Threading Bobbin Case 8
Threading the Machine 9
Needle Threader 9
Drawing Up Bobbin Thread 10
Thread Tension Dial 10
Stitch Selector Dial 11
Stitch Length Dial 11
Stitch Width Dial 11
Reverse Stitch Button 12
Darning plate 12
SECTION 3. BASIC SEWING
Straight Stitch Sewing 13
To change the direction 13
Seam Guide Lines 14
Turning a Square Corner 14
Zigzag Stitch 14
SECTION 4. UTILITY STITCHING
Tricot Stitch 15
Knit Stretch 15
Straight Stretch 16
Rick-rack Stretch 17
Sewing Buttons 17
Zipper Application 17
Buttonhole 18
Blind Hem Stitch 19
Rolled Hem 20
SECTION 5. DECORATIVE STITCHING
Shell Tuck 21
Smocking 21
Applique 22
Box Stitching 22
Fagoting 23
Decorative Satin Stitch Patterns 24
Stretch Stitch Patterns 24
SECTION 6. TAKING CARE OF YOUR MACHINE
Cleaning the Bobbin Case and the Hook 25
Cleaning the Feed Dog 25
Sewing Light 26
Troubleshooting 27

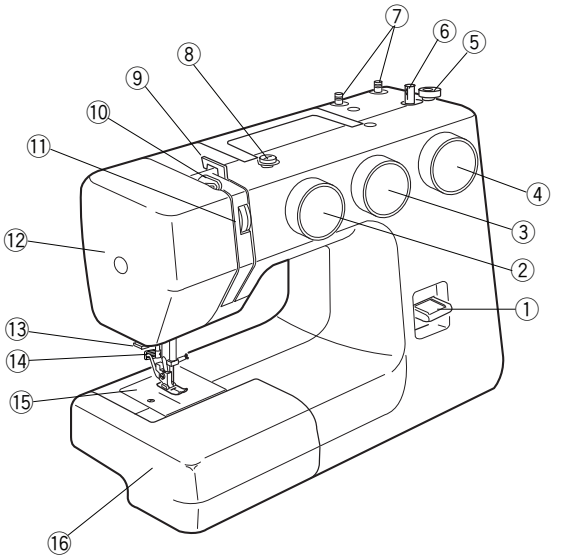

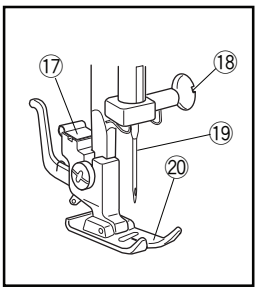

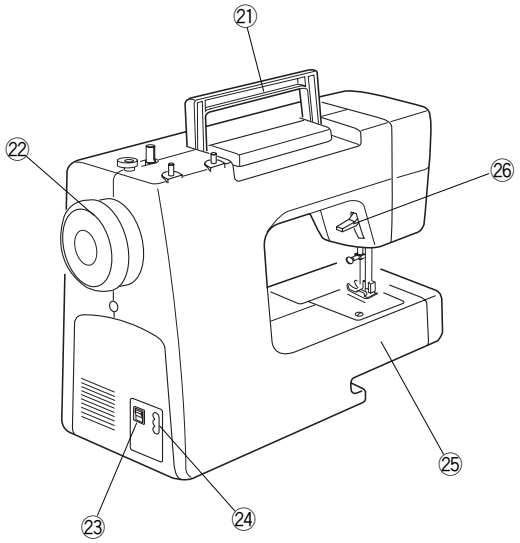

SECTION 1. ESSENTIAL PARTS

Name of Parts

① Reverse stitch button
② Pattern selector dial
③ Stitch length dial
④ Stitch width dial
⑤ Bobbin winder stopper
⑥ Bobbin winder spindle
⑦ Spool pins
⑧ Bobbin winder thread guide
⑨ Thread guide
⑩ Thread take-up lever
⑪ Thread tension dial
⑫ Face plate
⑬ Thread cutter
⑭ Needle threader
⑮ Needle plate
⑯ Extension table
⑰ Presser foot holder
⑱ Needle clamp
⑲ Needle
⑳ Presser foot
㉑ Carrying handle
㉒ Handwheel
㉓ Power switch
㉔ Machine socket
㉕ Free arm
㉖ Presser foot lifter

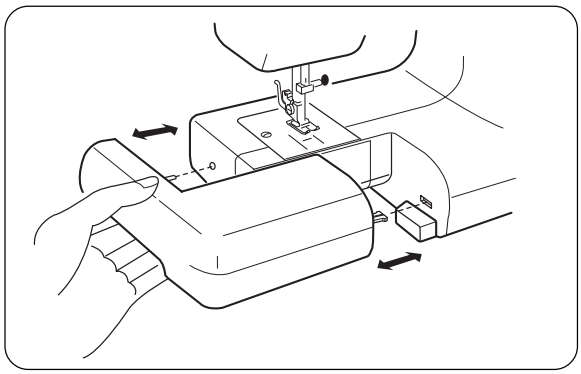

SECTION 2. GETTING READY TO SEW

Extension Table

The extension table provides added sewing surface and can be easily removed for free arm sewing.

Detaching the table:

Pull the table away from the machine.

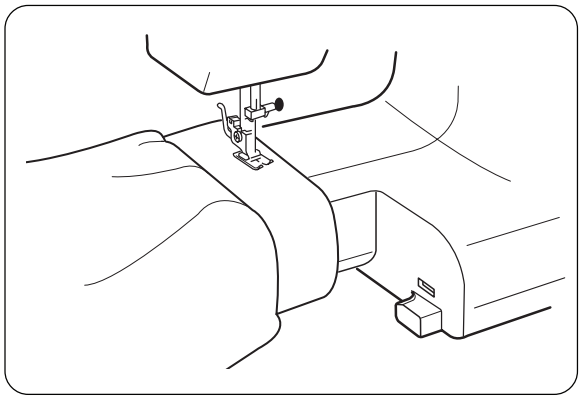

Free Arm Sewing

Avoid fabric bunching around the needle when bartacking to reinforce pockets, plackets and waistlines.

For stitching sleeves, waistbands, pant legs or any circular garment area.

For darning socks or mending knees, elbows or areas of wear in children's clothes.

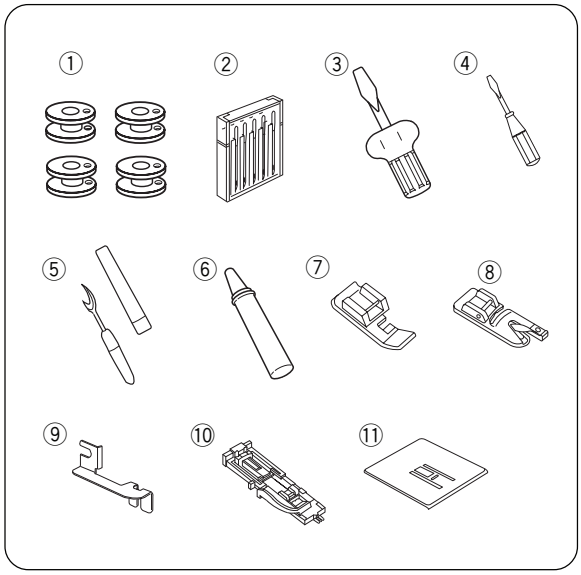

Standard Accessories

① Bobbins
② Needle set
③ Large screwdriver
④ Small screwdriver
⑤ Seam ripper/Buttonhole opener
⑥ Oil
⑦ Zipper foot
⑧ Hemmer foot
⑨ Hem guide
⑩ Buttonhole foot
⑪ Darning plate

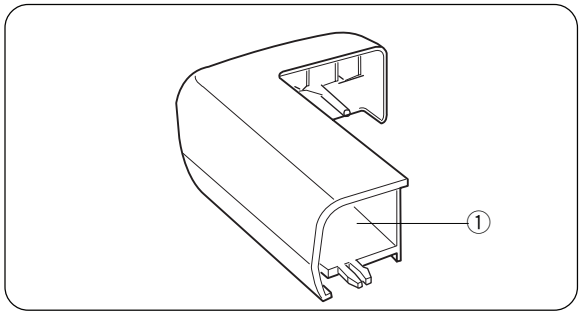

Accessories Storage Box

Sewing accessories are conveniently located in the extension table.

① Accessories storage box

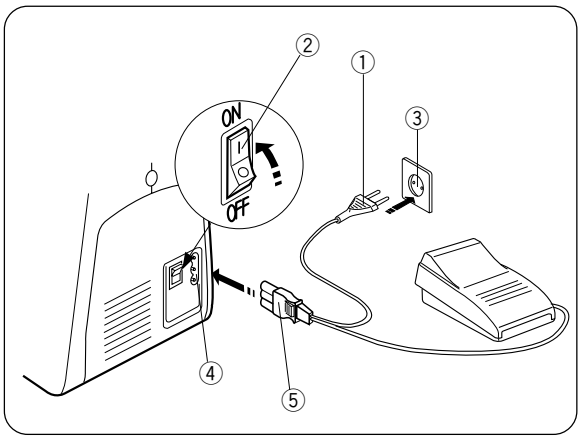

Connecting the Machine to the Power Supply

1 Turn off the power switch.
2 Insert the machine plug into the machine socket.
3 Insert the power supply plug into the outlet .
4 Turn on the power switch to turn on the power and sewing light.

① Power supply plug
② Power switch
③ Outlet
④ Machine socket
⑤ Machine plug

⚠ CAUTION:
Before connecting the power cord, make sure the voltage and frequency shown on the machine conform to your electrical power.

NOTE:
While in operation, always keep your eyes on the sewing area, and do not touch any moving parts such as the thread take-up lever, handwheel or needle.
Always turn off the power switch and unplug from the power supply:

– when leaving the machine unattended.
– when attaching or removing parts.
– when clearning the machine.

Do not place anything on the foot control, otherwise the machine will run inadvertently.

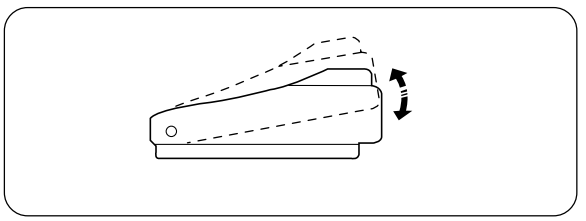

Controlling Sewing Speed

Sewing speed can be varied by the foot control. The harder you press on the foot control, the faster the machine runs.

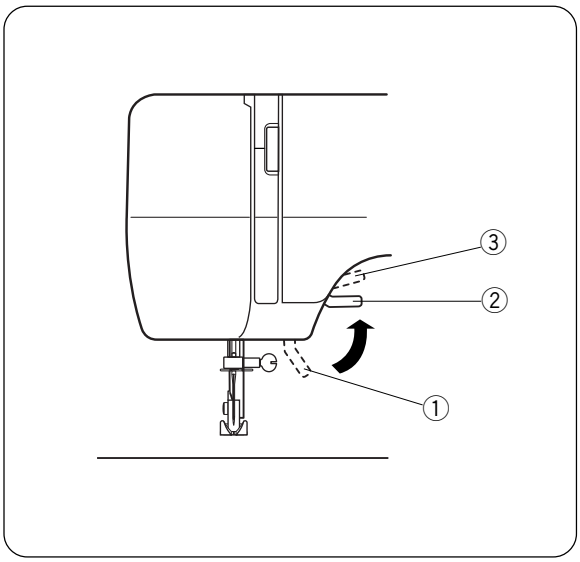

Presser Foot Lifter

The presser foot lifter raises and lowers your presser foot.
You can raise it about 0.6 cm (1/4″) higher than the normal up position for easy removal of the presser foot or to help you to place heavy fabric under the foot.

① Lowest position
② Normal up position
③ Highest position

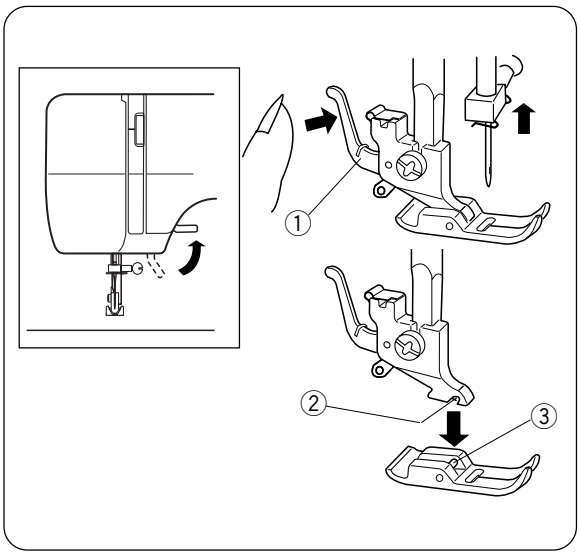

To Attach and Remove the Presser Foot

To remove

Turn the handwheel toward you to raise the needle to its highest position. Raise the presser foot. Press the lever on the back of the foot holder. The presser foot will drop off.

① Lever

⚠ CAUTION:
Turn off the power switch when changing the presser foot.

To attach

Place the presser foot so the pin on the foot lines up just under the groove of the foot holder. Lower the foot holder to lock the foot in place.

② Groove
③ Pin

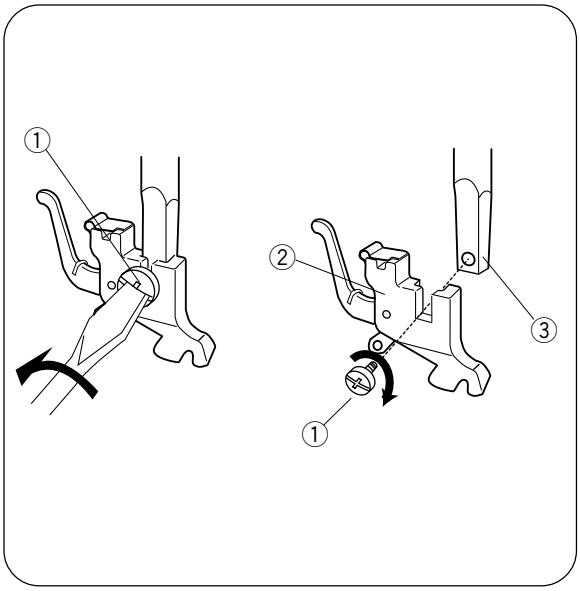

To Attach and Remove the Foot Holder

① Thumb screw
② Foot holder
③ Presser bar

To remove

Remove the thumb screw ① by turning it counterclockwise with a screwdriver.

To attach

Match the hole in the foot holder ② with the threaded hole in the presser bar ③. Fit the thumb screw ① into the hole. Tighten the screw ① by turning it clockwise with screwdriver.

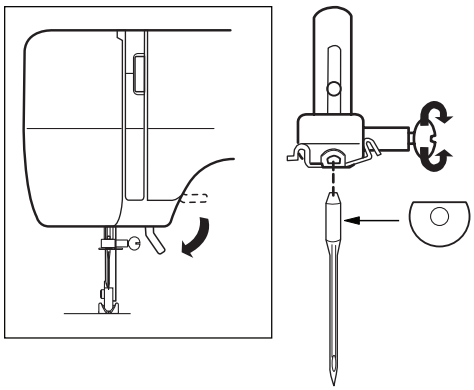

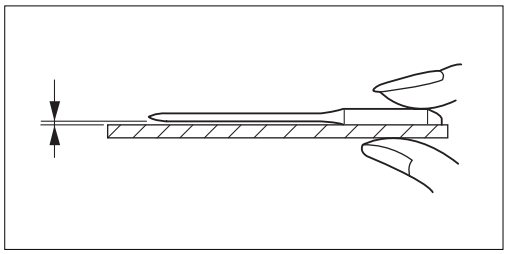

Changing Needles

Raise the needle by turning the handwheel toward you and lower the presser foot.

1. Loosen the needle clamp screw by turning it counterclockwise.
   Remove the needle from the clamp.
2. Insert the new needle into the clamp with the flat side away from you.
   When inserting the needle into the clamp, push it up as far as it will go and tighten the clamp screw firmly with the screwdriver.

To check the needle

Place the flat side of the needle on something flat (needle plate, glass etc.). The clearance between the needle and flat surface should be consistent. Never use a bent or blunt needle.

Fabric		Thread	Needle
Fine	Lawn Georgette Tricot Organza Crepe	Silk #80-100 Cotton #80-100 Synthetic #80-100	#9/65-11/75
Medium	Sheeting Jersey Broadcloth Fleece	Silk #50 Cotton #50-80 Synthetic #50-80	#11/75-14/90
Heavy weight	Denim Tweed Coating Quilting	Silk #30-50 Cotton #40-50 Synthetic #40-50	#14/90-16/100

Fabric and Needle Chart

* For general sewing, use needle size 11/75 or 14/90.
* A fine thread and needle should be used for sewing lightweight fabrics, so the fabric will not be marred.
* Heavy fabrics require a needle large enough to pierce the fabric without fraying the needle thread.
* Always test the needle size on a small scrap of the fabric that will be used for actual sewing.
* In general, use the same thread for the needle and bobbin.

NOTE:
When sewing stretch fabrics, very fine fabrics and synthetics, use a blue tip needle (#990311000, sold separately).
The blue tip needle effectively prevents skipped stitches.

NOTE:
3 x #14/90 needles are included in the envelop (#639804000).

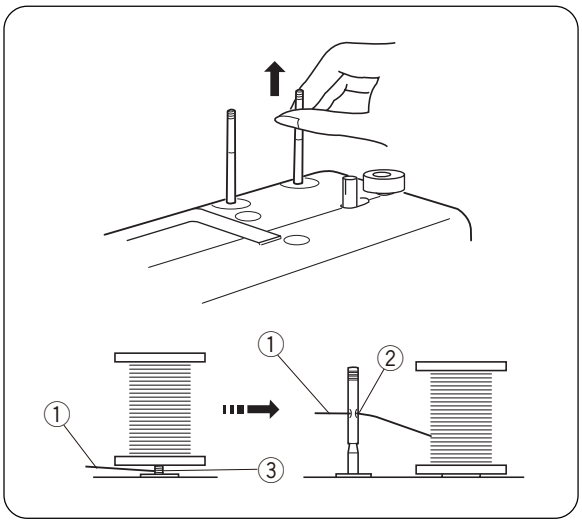

Setting Spool Pins

The spool pins are used for holding the spool of thread in order to feed thread to the machine. To use, pull up the spool pin. Push down for storage.

NOTE:

When using thread which has tendency to tangle around a spool pin ③, through the hole ②, of spool pin as shown.
The hole should face the thread spool.

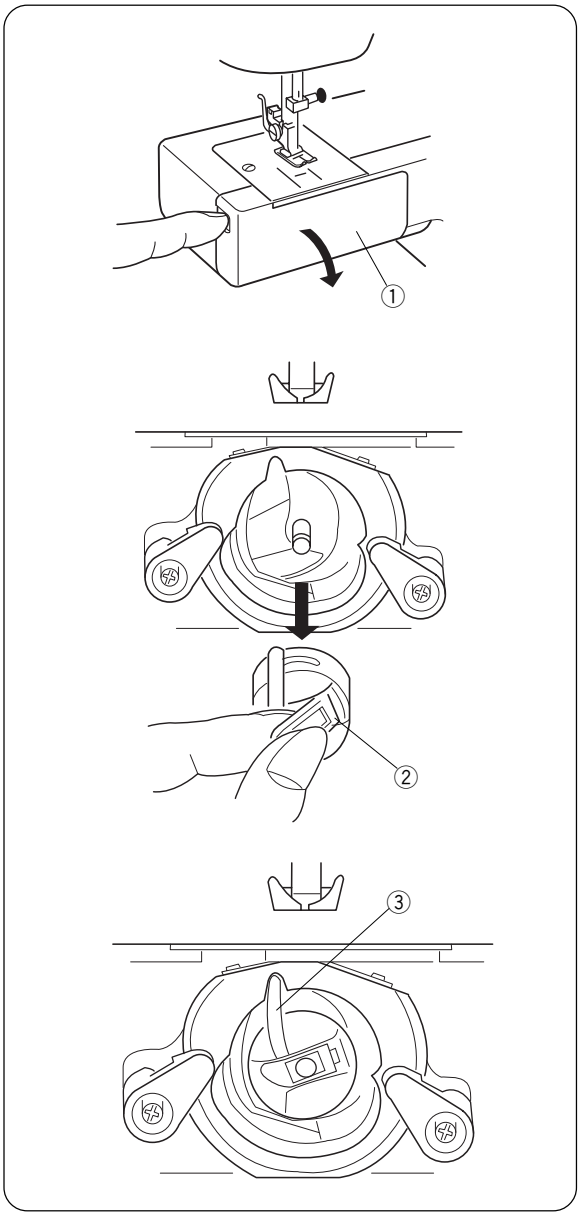

Removing or Inserting the Bobbin Case

① Open the hook cover.

Hook cover

Raise the needle by turning the handwheel toward you.
Take out the bobbin case by holding the latch.

② Latch

When inserting the bobbin case, place the horn into the recess of the hook race.

③ Horn

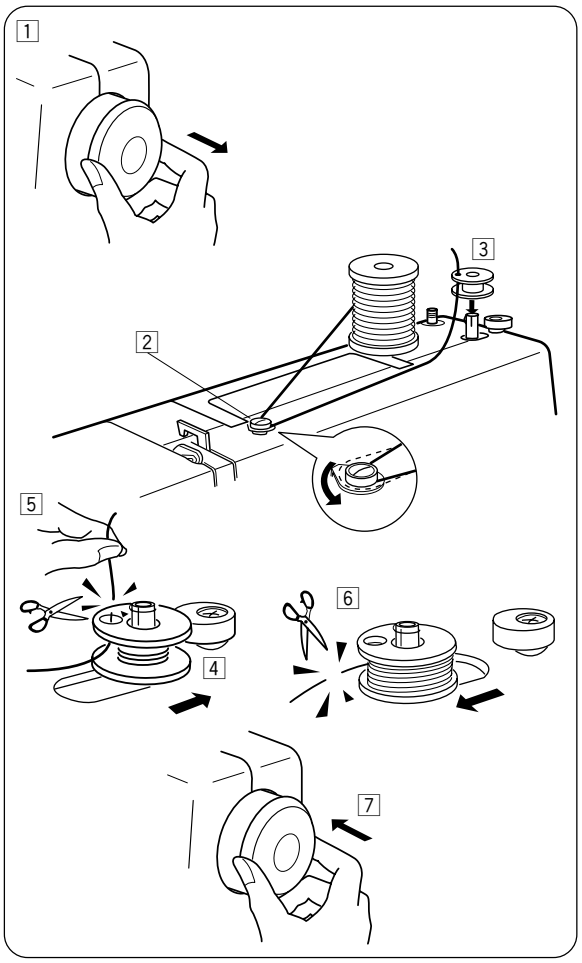

Winding the Bobbin

1 Pull the handwheel out.
2 Draw the thread from the spool.
Guide the thread around the bobbin winder thread guide.
3 Insert the thread through the hole in the bobbin from the inside to the outside.
Put the bobbin on the bobbin winder spindle.
4 Push it to the right.
5 With the free end of the thread held in your hand, depress the foot control.
Stop the machine when it has made a few turns, and cut the thread close to the hole in the bobbin.
6 Depress the foot control again.
When the bobbin is fully wound, stop the machine.
Return the bobbin winder spindle to its original position by moving the spindle to the left, and cut the thread.
7 Push the handwheel back into the original position.

NOTE:
Return the bobbin winder spindle when the machine stops.

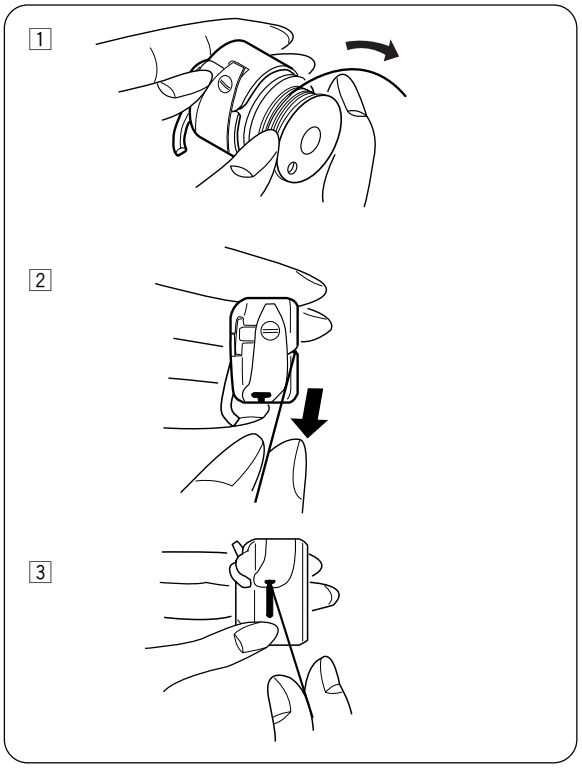

Threading Bobbin Case

1 Place the bobbin into the bobbin case.
Make sure the thread unwinds in the direction of arrow.

2 Pull the thread into the bobbin case slot.

3 Draw the thread under the tension spring and into the delivery eye.

* Leave about 10 cm (4″) of free thread.

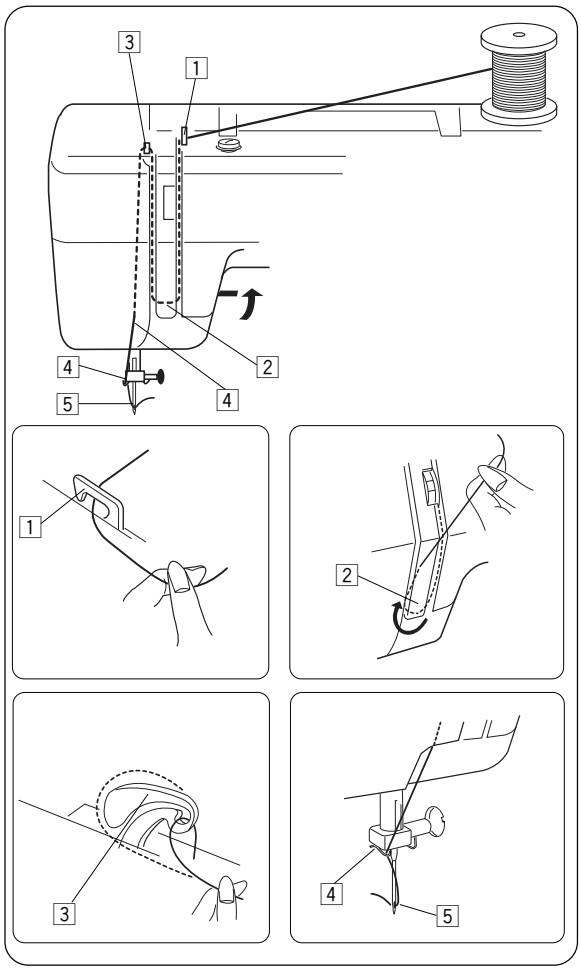

Threading the Machine

Raise the take-up lever to its highest position by turning the handwheel toward you.
Raise the presser foot.
Place a spool on the spool pin as shown, with thread coming from back of the spool.

1 Draw the thread into thread guide using both hands.

2 While holding the thread near spool, draw thread down into the tension area and then around the check spring holder.

3 Firmly draw the thread up and through the take–up lever from right to left.

4 Then draw the thread down and slip it into needle bar thread guide on the left.

5 Thread the needle eye from front to back.

NOTE: You may want to cut the thread end with sharp scissors for easier needle threading.

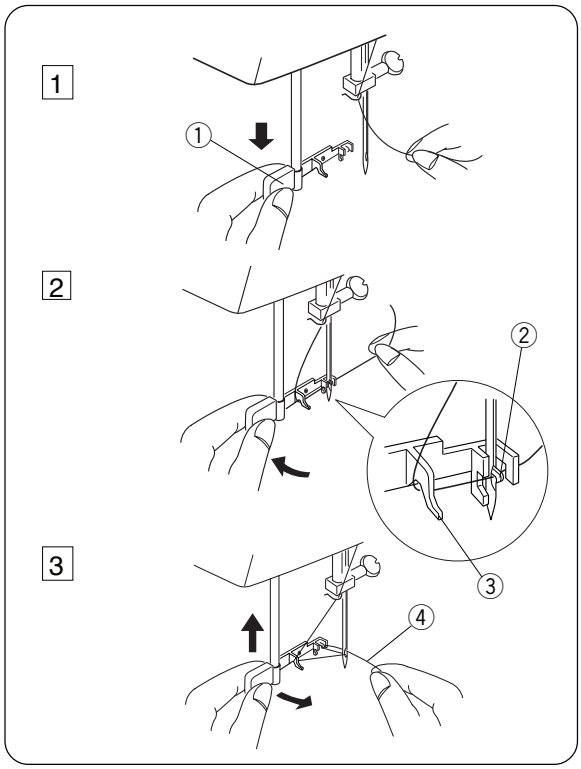

Needle Threader

1 Raise the needle to its highest position. Push down the needle threader knob ① as far as it will go.
The hook comes out through the needle eye from behind.

2 Paying close attention to the needle point, draw the thread around the guide ③ and under the hook ②.

3 Release the knob slowly while holding the thread end ④ with your hand. A loop of the thread is pulled through the needle eye.
① Knob
② Hook
③ Guide
④ Thread end

NOTE:
The needle threader can be used with a #11 to #16 needle, or a #11 Blue tipped needle. Thread sizes 50 to 90 are recommended.

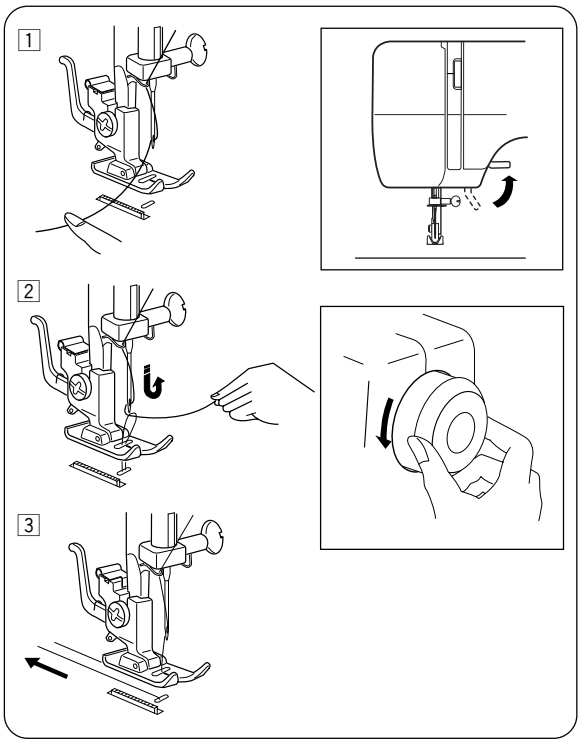

Drawing Up Bobbin Thread

1 Raise the presser foot and hold the needle thread lightly with your left hand.

2 Turn the handwheel slowly toward you with your right hand until the needle goes down and continue turning the handwheel until the take-up lever is at its highest position. Lightly draw up the needle thread forming a loop of the bobbin thread.

3 Pull 10 cm (6˝) of both threads back and under the presser foot.

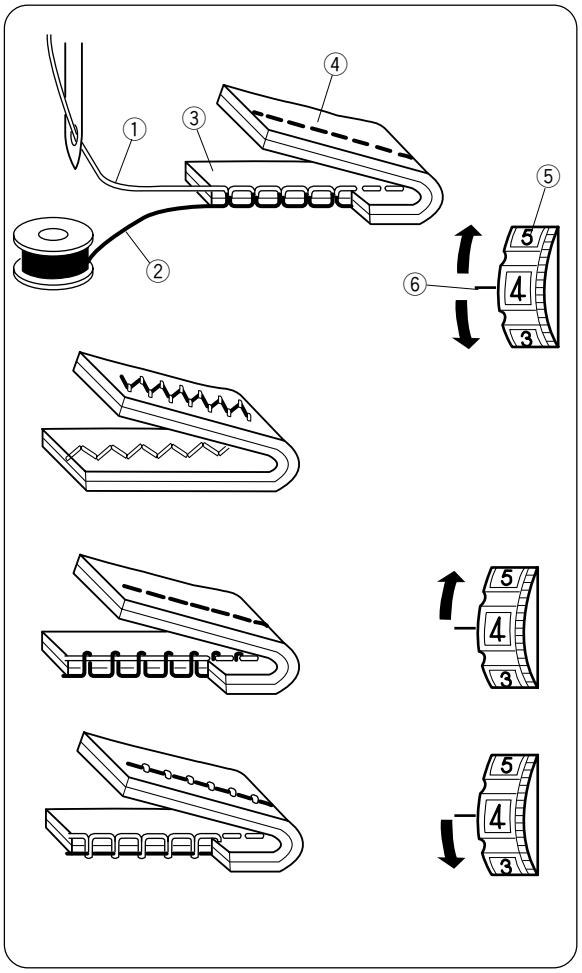

Thread Tension Dial

1 **Correct tension**
The thread tension is adjusted depending on the sewing materials, layers of fabric and sewing method.
For an ideal zigzag stitch, the bobbin thread does not show on the right side (top side) of the fabric, and the needle thread shows slightly on the wrong side (bottom side) of the fabric.

① Needle thread (Top thread)
② Bobbin thread (Bottom thread)
③ Right side (Top side) of fabric
④ Wrong side (Bottom side) of fabric
⑤ Thread tension dial
⑥ Setting mark

2 **Needle thread tension is too tight**
When the bobbin thread (bottom thread) appears on the right side (top side) of the fabric, loosen the needle thread tension by moving the dial to a lower number.

3 **Needle thread tension is too loose**
When the needle thread (top thread) appears on the wrong side (bottom side) of the fabric, tighten the needle thread tension by moving the dial to a higher number.

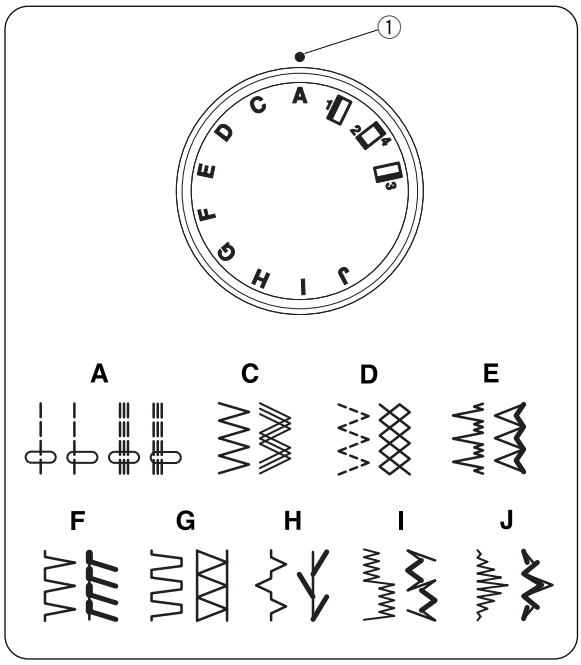

Stitch Selector Dial

Turn the stitch selector dial to set the setting mark with the symbol corresponding to the desired pattern.

① Setting mark

> **⚠ CAUTION**
> To avoid needle or fabric damage, make sure the needle is up and out of the fabric while selecting a stitch.

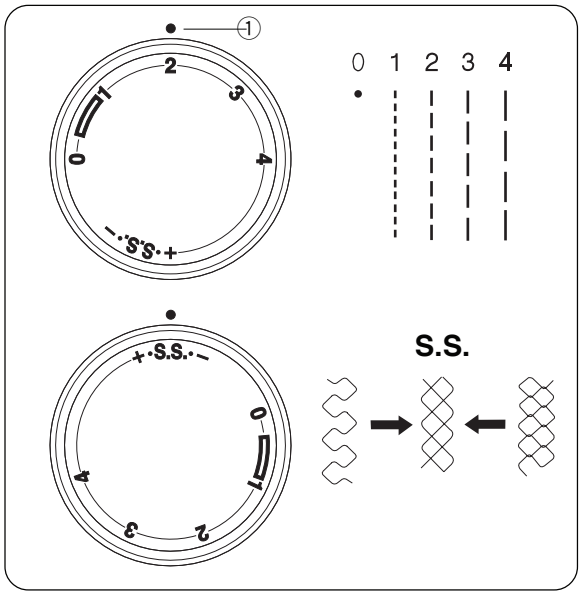

Stitch Length Dial

Turn the stitch length dial to set the setting mark with the desired stitch length.

The higher the number, the longer the stitch length.

① Setting mark

- Adjust the dial in the 0.5–4 range when you sew the zigzag stitch.
- Set the dial at “S.S.” to sew the stretch stitch pattern sewing.
- If the stretch stitch pattern is uneven, turn the stitch length dial in the direction of “–” to compress it, or “+” to expand it.

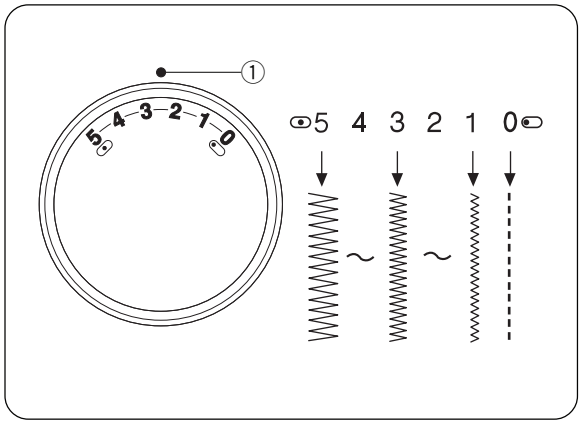

Stitch Width Dial

Turn the stitch width dial to set the desired stitch width at the setting mark.

The higher the number, the wider the stitch width

① Setting mark

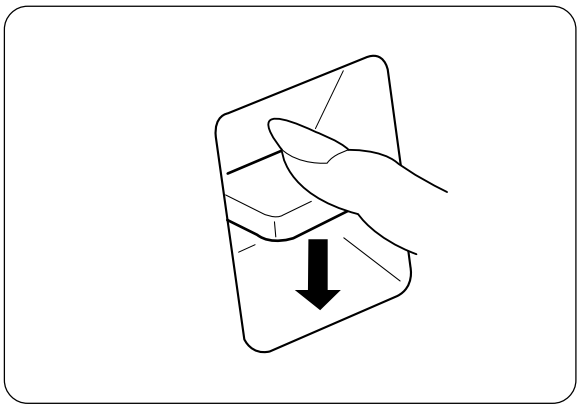

Reverse Stitch Button

As long as you keep the reverse stitch button depressed, the machine will sew in reverse.

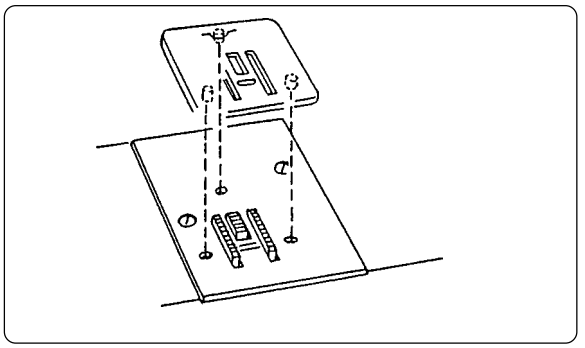

Darning Plate

To put on the Darning Plate:

1. Position the darning plate with the 3 pins on the holes.
2. Fit the darning plate pins into the needle plate holes.

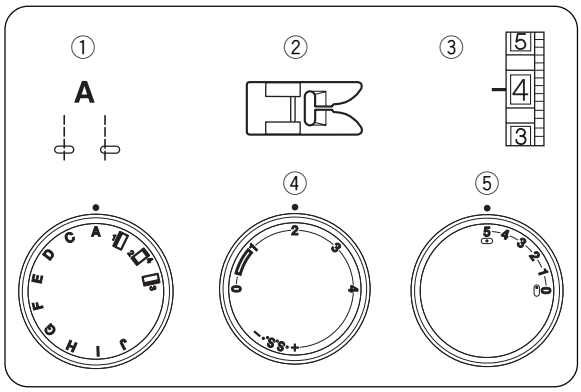

SECTION 3. BASIC SEWING

Straight Stitch Sewing

① Pattern selector: A
② Presser foot: Zigzag foot
③ Thread tension: 2–6
④ Stitch length: 1.5–4
⑤ Stitch width: (0) or (5)

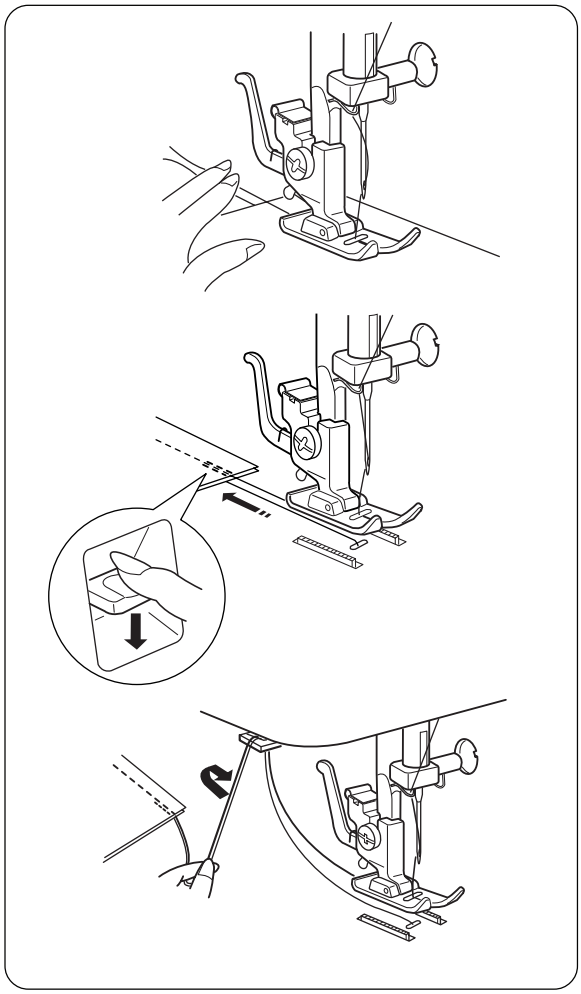

1 Raise the presser foot and position the fabric with its edge lining up with a seam guide line on the needle plate.
Lower the needle into the fabric.
Lower the presser foot and smooth the threads toward the back. Depress the foot control.
Gently guide the fabric along the guide line letting the fabric feed by itself.

2 For fastening the end of seams, press the reverse stitch lever and sew several reverse stitches.
Raise the presser foot and remove the fabric, drawing the threads to the back.

3 Cut the threads with the thread cutter.
The threads are now the proper length to begin sewing the next seam.

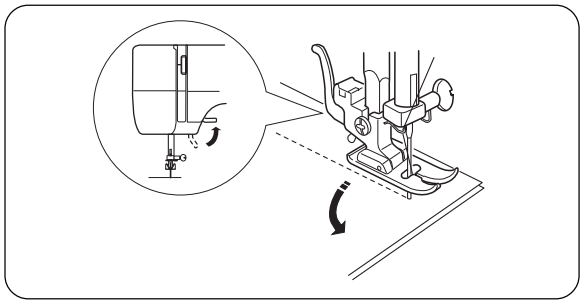

To change the direction

Stop the machine and turn the handwheel toward you to bring the needle down into the fabric. Raise the presser foot.
Pivot the fabric around the needle to change sewing direction as desired.
Lower the presser foot and continue sewing.

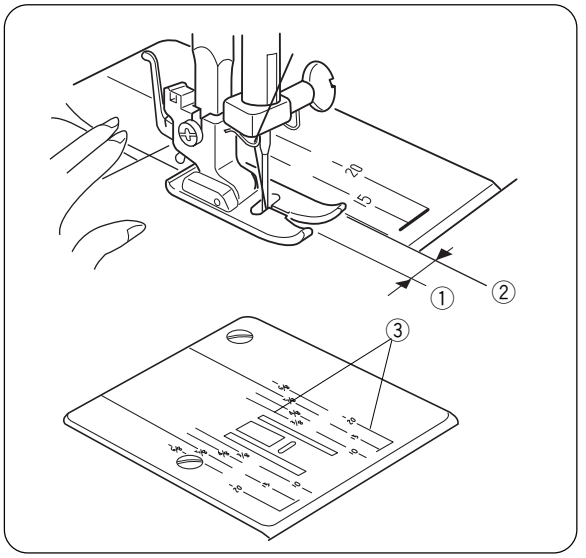

Seam Guide Lines

The numbers on the needle plate indicate the distance between the center needle position and the guideline.
The numbers in front are centimeters.
The numbers in back are fractions of an inch.

Number	15	20	4/8	5/8	6/8
Distance (cm)	1.5	2.0	1.3	1.6	1.9

① Center needle position
② Guide lines
③ Numbers

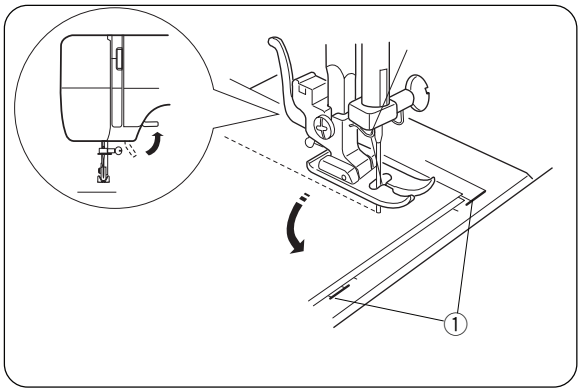

Turning a Square Corner

To turn a square corner 5/8″ (1.6 cm) from the fabric edge.
Stop stitching and lower the needle by turning the handwheel counterclockwise.
Raise the presser foot and turn the fabric to line the edge with the 5/8″ (1.6 cm) seam guide.
Lower the presser foot and begin stitching in the new direction.
Line up the fabric edge facing you with the cornering guide shown.

① Cornering guide

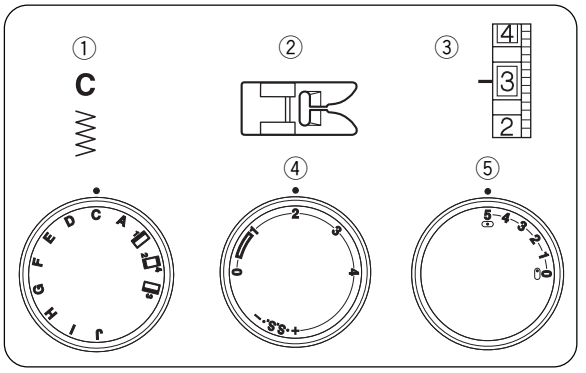

Zigzag Stitch

① Pattern selector:	C
② Presser foot:	Zigzag foot
③ Thread tension:	2–5
④ Stitch length:	0.5–4
⑤ Stitch width:	5

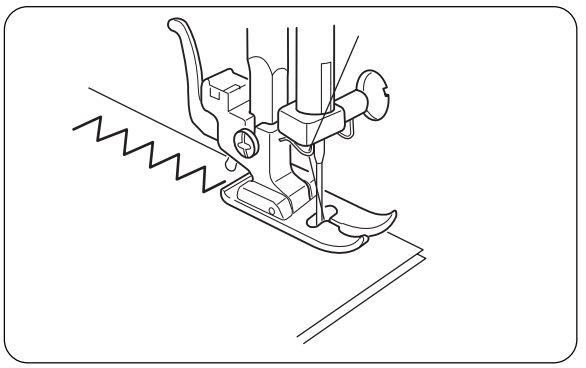

Simple zigzag stitching is widely used for overcasting, sewing on buttons, etc.

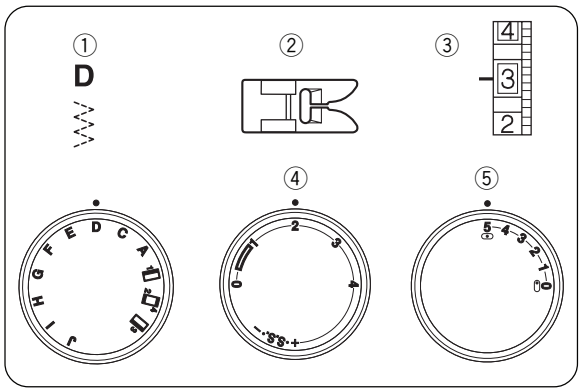

SECTION 4. UTILITY STITCHING

Tricot Stitch

① Pattern selector: D
② Presser foot: Zigzag foot
③ Thread tension: 1–4
④ Stitch length: 0.5–4
⑤ Stitch width: 5

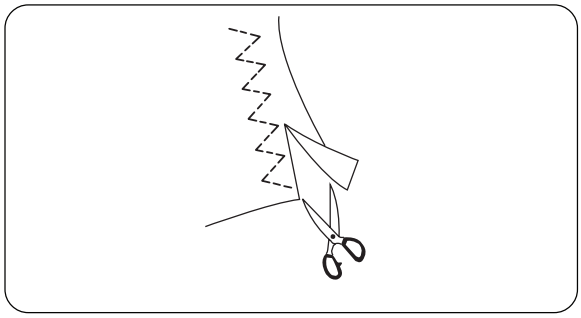

This stitch is used to finish the raw edge on synthetics and other fabrics that tend to pucker.
Place your fabric to allow a 5/8″ (1.6 cm) seam.
Trim the seam allowance after sewing.
Be careful not to cut the stitches.

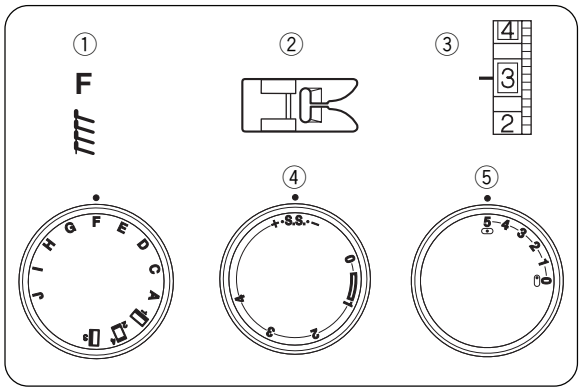

Knit Stitch

① Pattern selector: F
② Presser foot: Zigzag foot
③ Thread tension: 1–4
④ Stitch length: S.S.
⑤ Stitch width: 5

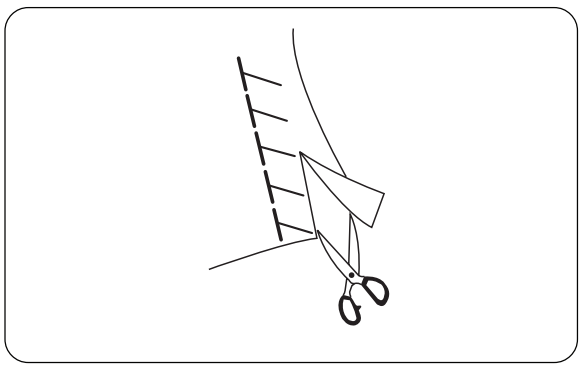

This knit stitch is ideal for sewing swimwear and stretch velour because it provides the greatest amount of elasticity and strength.
Place your fabric to allow a 5/8″ (1.6 cm) seam.
Trim the seam allowance after sewing.
Be careful not to cut the stitches.

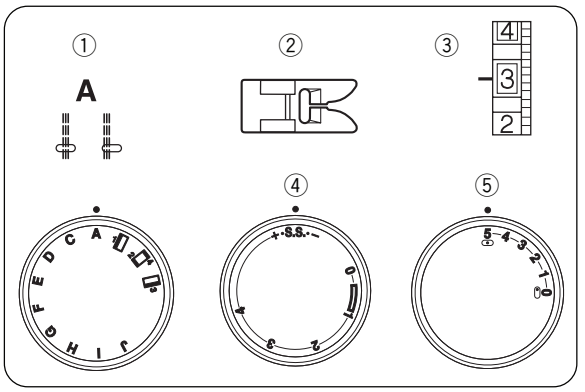

Straight Stretch

① Pattern selector: A
② Presser foot: Zigzag foot
③ Thread tension: 2–6
④ Stitch length: S.S
⑤ Stitch width: (0) or (5)

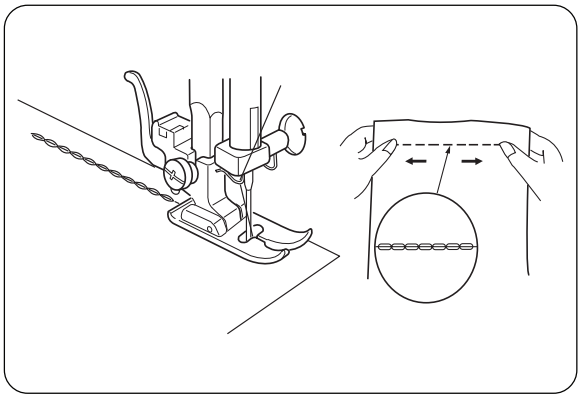

This strong, durable stitch is recommended where both elasticity and strength are necessary to ensure comfort and durability.

Use it to reinforce areas such as crotch and armhole seams as well as to eliminate puckering on knits and stretch fabrics. Also use when constructing items requiring extra strength such as backpacks.

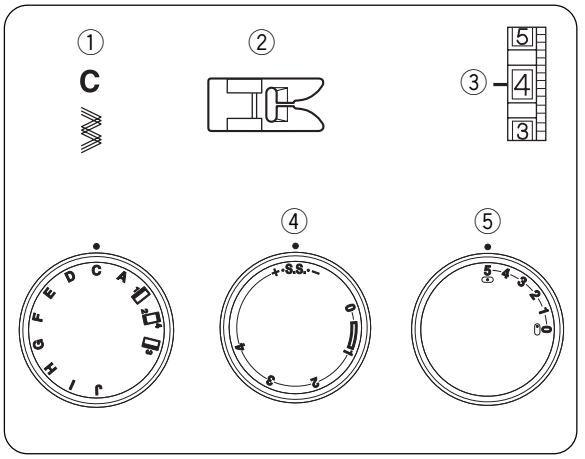

Rick-rack Stretch

① Pattern selector: C
② Presser foot: Zigzag foot
③ Thread tension: 2–6
④ Stitch length: S.S
⑤ Stitch width: 2–5

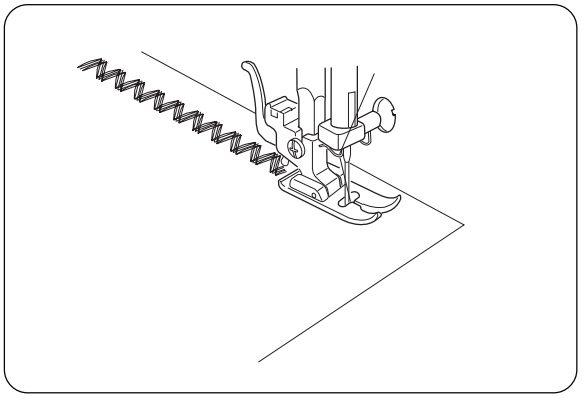

Sew on stretch fabrics in any area that you might use a zigzag stitch. This stitch is also used as a decorative topstitch.

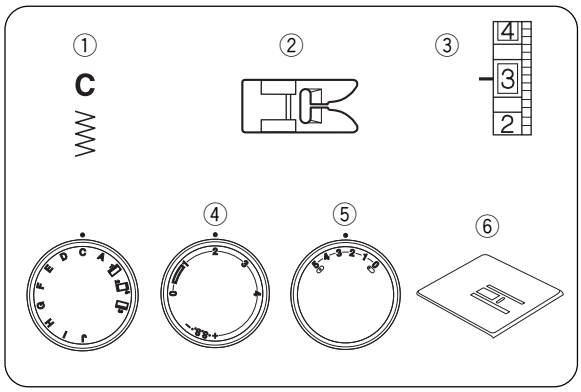

Sewing Buttons

① Pattern selector: C
② Presser foot: Zigzag foot
③ Thread tension: 3–7
④ Stitch length: Any
⑤ Stitch width: Adjust as necessary
⑥ Darning plate

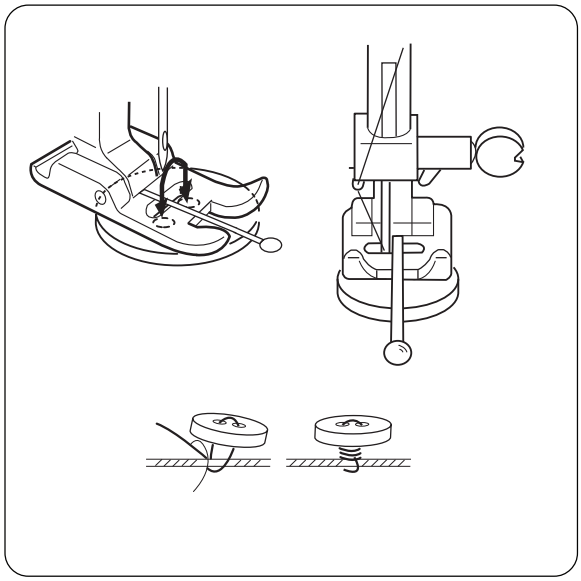

Position the darning plate onto the needle plate. Drop the feed dogs. Match the holes in a button with the horizontal slot on the Presser foot. Adjust stitch width matching the distance of the holes on the button. Lower the foot to hold the button in place. Check to see if the needle enters into the holes on the button by turning the handwheel by hand. Sew about ten (10) stitches. To strengthen the shank, cut the threads leaving about 4.0˝ (10.0 cm). Bring the needle thread down through one of the holes on the button and wind it around the shank. Bring the needle thread to the wrong side (bottom side) and knot. After button sewing is completed, remove the darning plate.

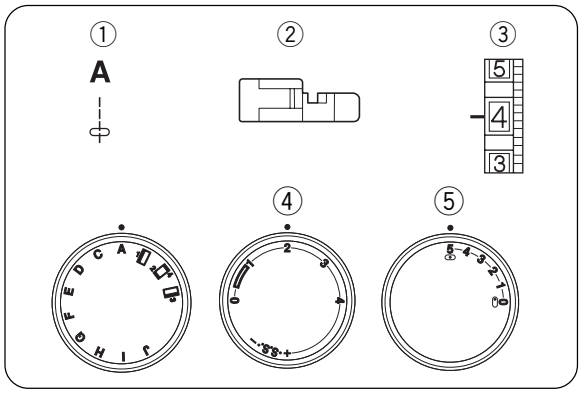

Zipper Application

① Pattern selector: A
② Presser foot: Zipper foot
③ Thread tension: 2–6
④ Stitch length: S.S
⑤ Stitch width: 5

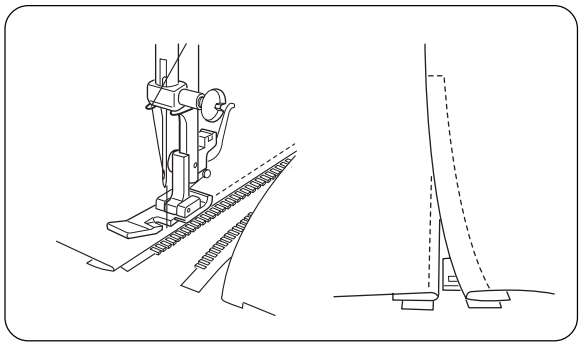

Pin or baste zipper tape to fabric and place it under the foot.
Smooth the threads toward the back and lower the foot.
To sew the left side of the zipper, guide the zipper teeth along the edge of the foot and stitch through the garment and zipper tape.
Turn the fabric and sew the other side of the zipper in the same way as you did the left side.

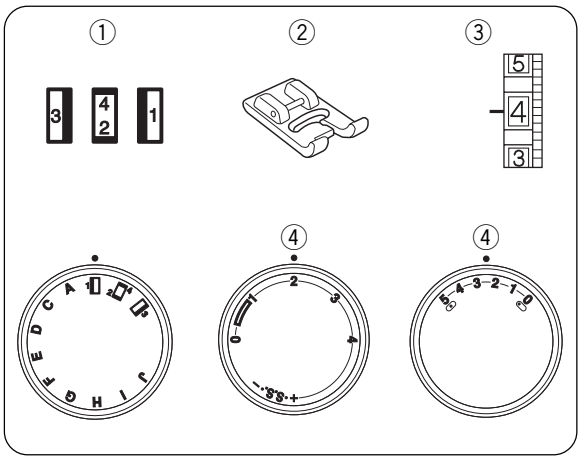

Buttonhole

① Pattern selector: (BH)
② Presser foot: Buttonhole foot
③ Thread tension: 1–5
④ Stitch length: 0.5–1

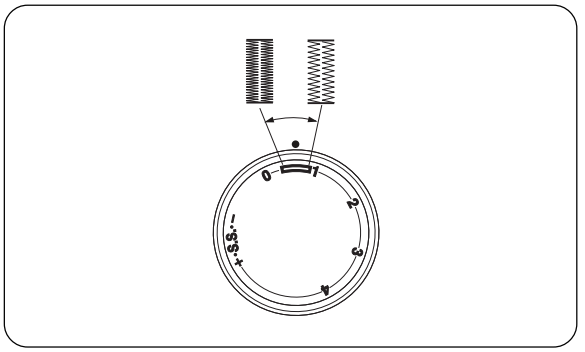

To adjust buttonholea stitch density:

Set the stitch length dial between 0.5 and 1.0 to adjust the buttonhole stitch density.

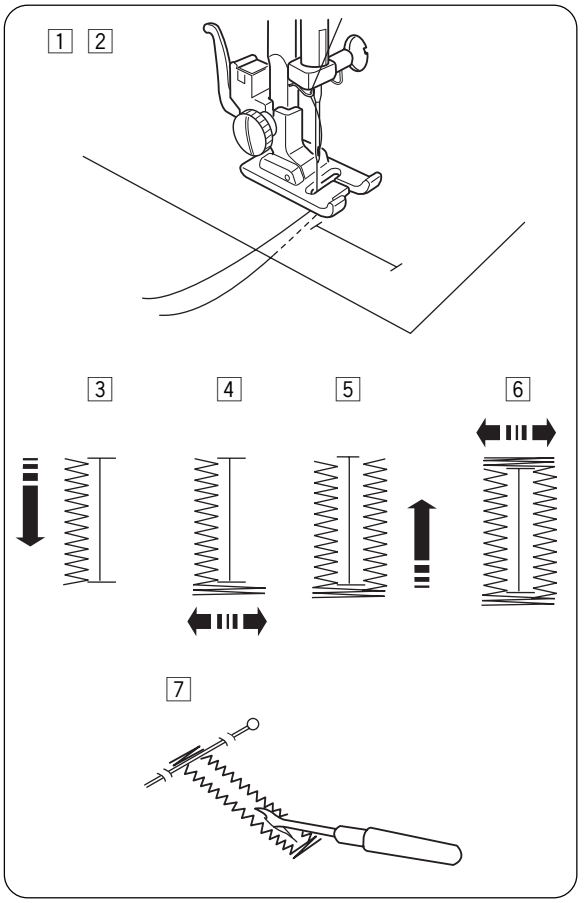

1 Carefully mark buttonhole length on fabric.
Place the fabric under the foot with the buttonhole marking running toward you.

2 Slide both threads to the left.
Line up the foot with the top mark on the fabric.
Lower the needle into the fabric where the buttonhole is to start, and lower the foot.

3 Set the pattern selector dial at “ ”.
Sew forward until you reach the front marking of your buttonhole.
Stop sewing at a left stitch.

4 Set the pattern selector dial at “ ”.
Sew 4 to 6 stitches. Stop sewing at a right stitch.

5 Set the pattern selector dial at “ ”.
Sew until you reach the back marking of the buttonhole.
Stop sewing at a right stitch.

6 Set the pattern selector dial at “ ”.
Sew a few bartacks and raise the needle from the fabric.
Set the stitch length dial to “0” and the pattern selector dial at straight sewing.
Sew a few locking stitches.

7 Remove the fabric from the machine and cut the sewing thread. Insert a pin inside the bartack.
Then cut the opening with a seam ripper.
Take care not to cut the stitches.

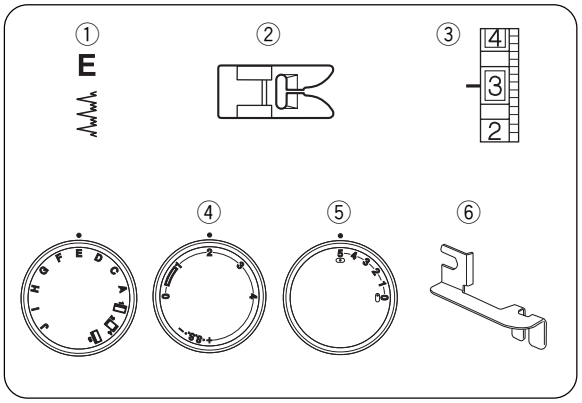

Blind Hem Stitch

① Pattern selector: E
② Presser foot: Zigzag foot
③ Thread tension: 1–3
④ Stitch length: 1–3
⑤ Stitch length: 5
⑥ Hem guide

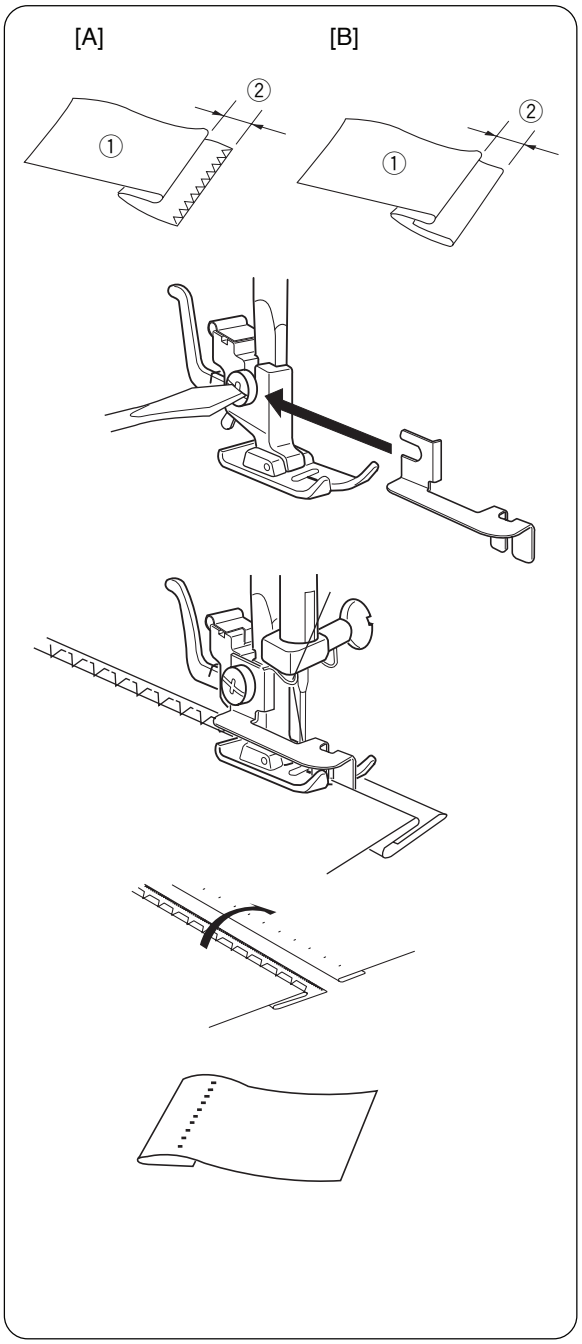

1 On heavyweight fabrics that ravel, the raw edge should be overcast first. Then fold the hem, as illustrated, leaving 1/4″ (0.7 cm) of the hem edge showing.
① Wrong side of the fabric
② 1/4″ (0.7 cm)
[A] Heavy weight fabrics
[B] Fine or medium weight fabrics

2 Lower the presser foot, then loosen the foot holder screw to place the hem guide between the screw and the shank of foot holder.
Tighten the screw making sure the wall of hem guide is placed in the middle of the toes of the presser foot.

3 Raise the presser foot and place the fabric under the foot so that the fold rests against the wall of hem guide.
Lower the foot, then stitch slowly for better control so that the zigzag stitches fall on the hem allowance and pierce the fold.
While sewing, make sure the fold runs along the wall of hem guide.

4 After hemming is completed, open the fabric with the top side up. The top side of the fabric should show only the blind stitches.

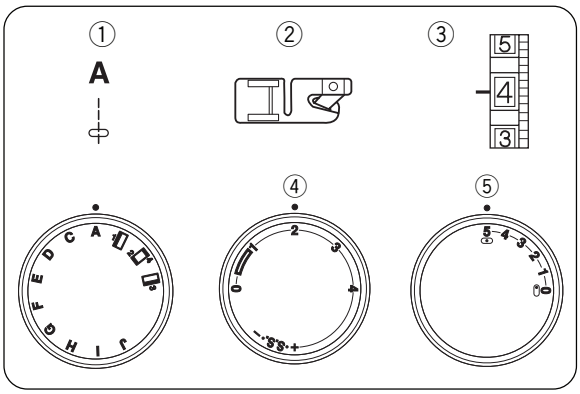

Rolled Hem

① Pattern selector: A
② Presser foot: Hemmer foot
③ Thread tension: 2–6
④ Stitch length: 1.5–4
⑤ Stitch width: 5

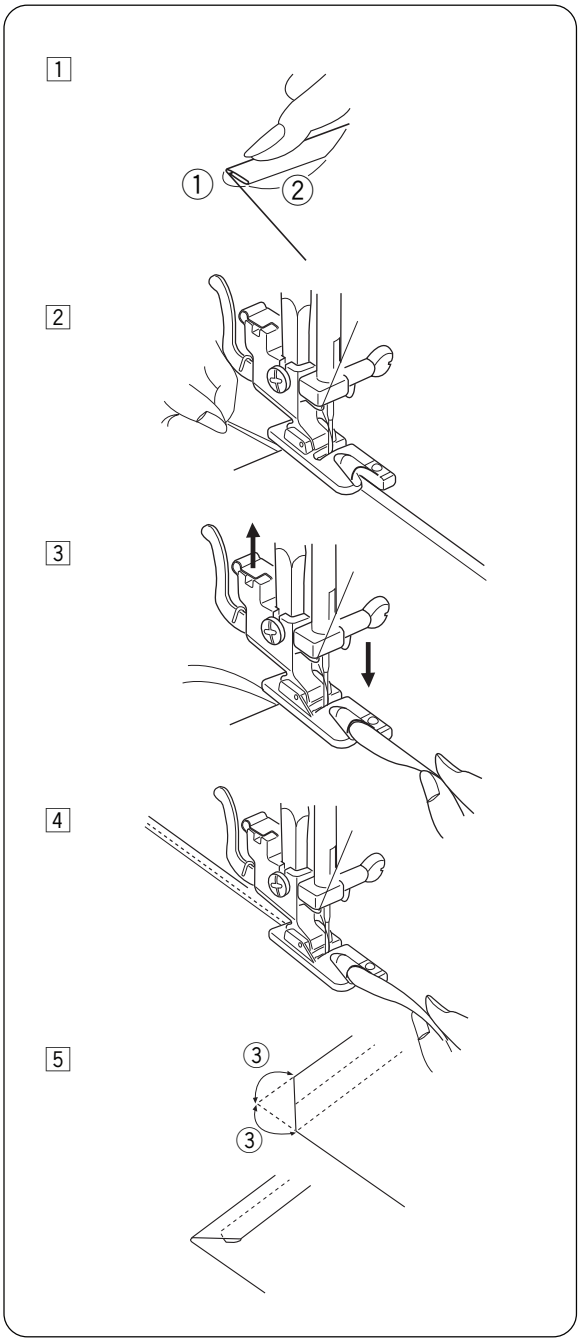

1 Make a double 0.25cm (1/8″) fold approximately 8cm (3″) in length.
① 0.25cm (1/8″)
② 8cm (3″)

2 Lower the needle into the fabric at the point where sewing is to begin, then lower the hemmer foot.
Sew three or four stitches while pulling the needle and bobbin threads.

3 Lower the needle into the fabric and lift the hemmer foot.
Insert the folded portion of the fabric into the curl of the hemmer foot.

4 Lower the hemmer foot, then sew by lifting up the edge of the fabric to keep it feeding smoothly and evertly.

5 Trim about 0.7cm (5/16″) from corners as illustrated, to reduce bulk.
③ 0.7cm (5/16″)

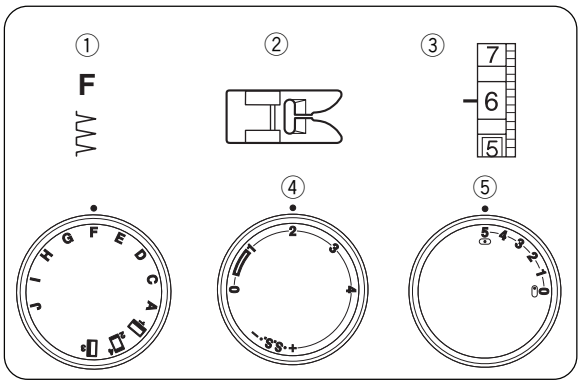

SECTION 5.
DECORATIVE STITCHING

Shell Tuck

① Pattern selector: F
② Presser foot: Zigzag foot
③ Thread tension: 6–8
④ Stitch length: 2–3
⑤ Stitch width: 5

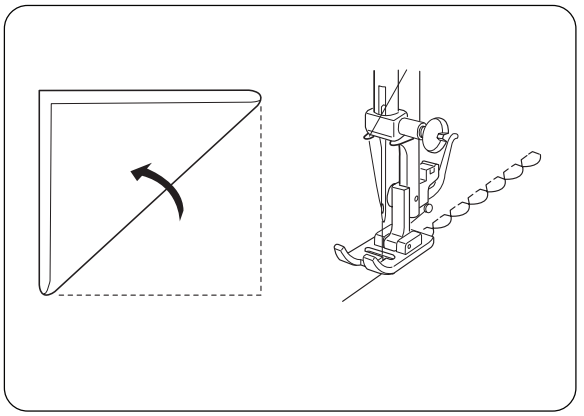

Use a lightweight fabric (tricot, for example).
Fold and stitch on the bias.
When the needle swings to the right, allow the needle to just clear the folded edge of the fabric.
After stitching, open the fabric and iron press the tucks flat to one side.

NOTE:
Increase the needle thread tension to form prominent tucks.

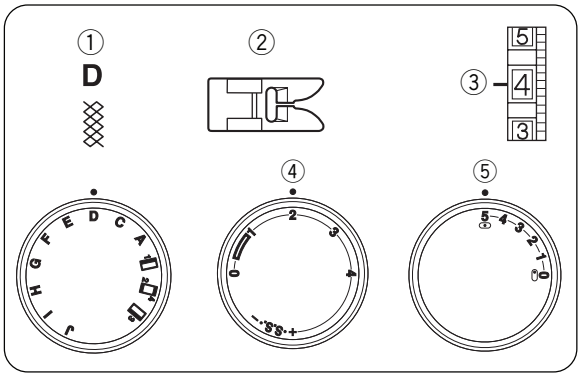

Smocking

① Pattern selector: D
② Presser foot: Zigzag foot
③ Thread tension: 1–4
④ Stitch length: S.S
⑤ Stitch width: 5

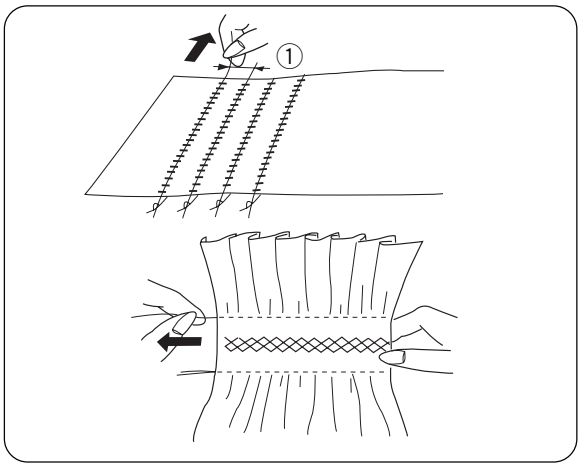

With the stitch length at “4”, sew straight stitching lines 1 cm (3/8″) apart, across the area to be smocked.
Knot the threads along one edge. Pull the bobbin threads and distribute the gathers evenly.
Secure the threads at the other end.
Sew the decorative stitch between the gathering stitches.
Pull out the gathering stitches.
① 3/8″ (1 cm)

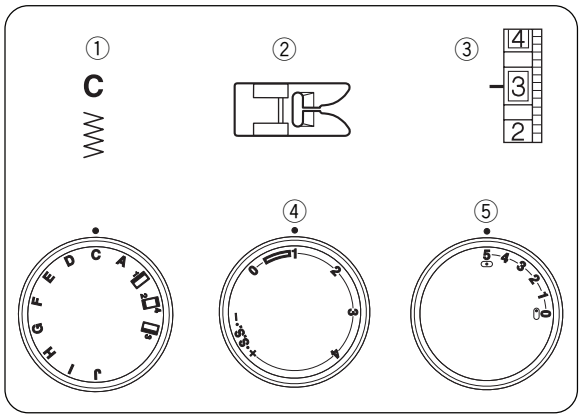

Applique

① Pattern selector: C
② Presser foot: Zigzag foot
③ Thread tension: 1–4
④ Stitch length: 0.5–1
⑤ Stitch width: 5

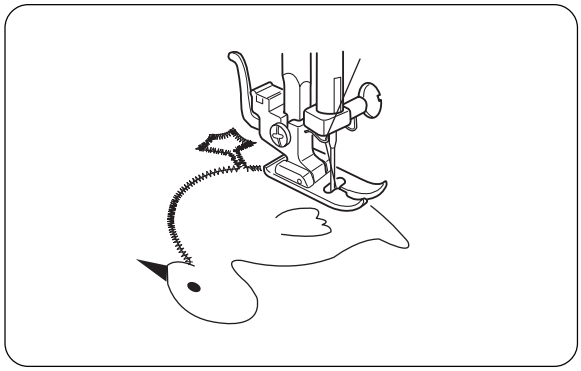

Baste (or fuse with iron-on fabric joiner) applique pieces on the fabric.
Stitch around the applique making sure the needle falls along the outer edge of the applique.
When sewing corners, lower the needle down into the fabric.
Raise the presser foot and pivot the fabric to the right or left.

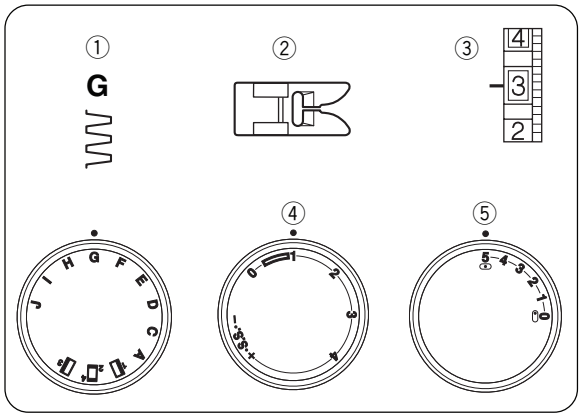

Box Stitching

① Pattern selector: G
② Presser foot: Zigzag foot
③ Thread tension: 1–4
④ Stitch length: 0.5–2
⑤ Stitch width: 5

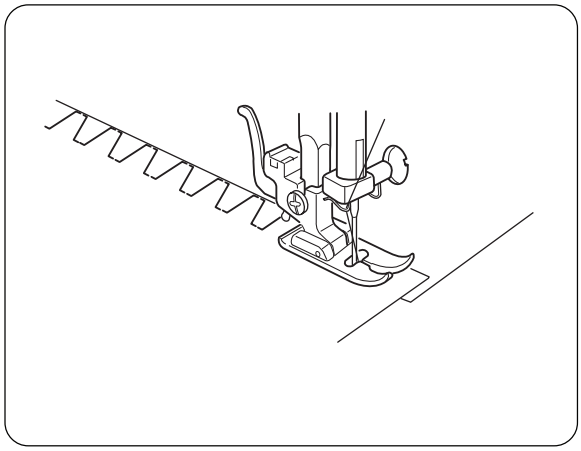

Use this stitch to join heavy weight fabrics.
Overlap two raw edges together and use this stitch to join them.

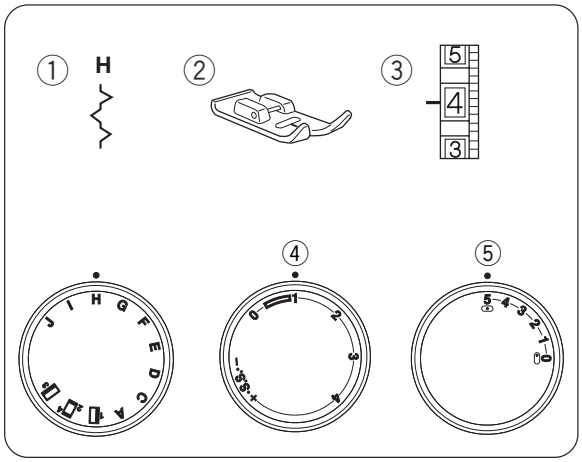

Fagoting

① Stitch selector: H
② Presser foot: Zigzag foot
③ Thread tension: 3 - 8
④ Stitch length: 0.5 - 2
⑤ Stitch width: 5

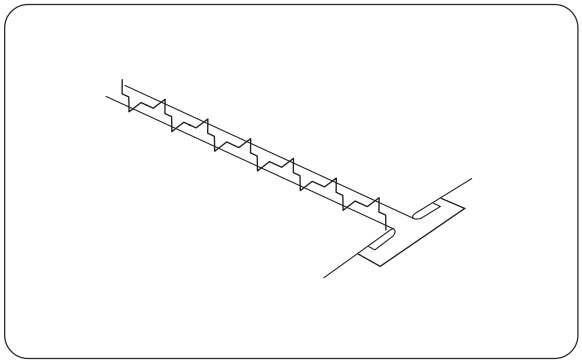

Fold under 1.5cm (5/8") on each fabric edge and press.
Pin the two edges to paper 0.3cm (1/8") apart.
Sew slowly, guiding the fabric so the needle catches the folded edge on each side.

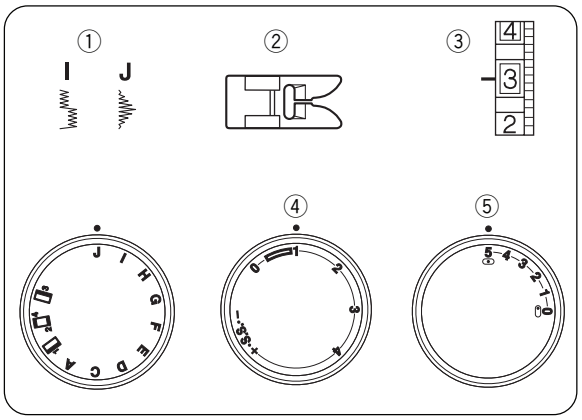

Decorative Satin Stitch Patterns

① Pattern selector: I–J
② Presser foot: Zigzag foot
③ Thread tension: 1–4
④ Stitch length: 0.5–1
⑤ Stitch width: 5

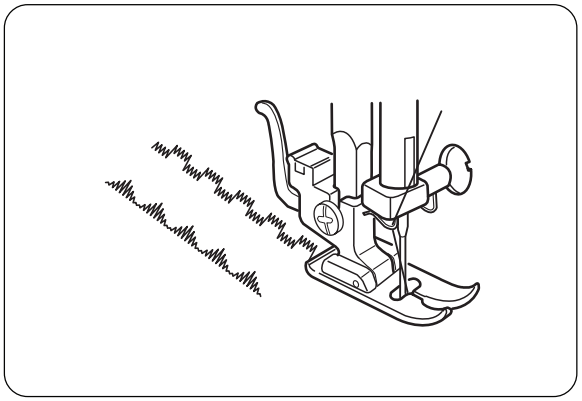

For a delicate appearance on fabric such as chiffon, use a single layer with a tear-away backing, if necessary.

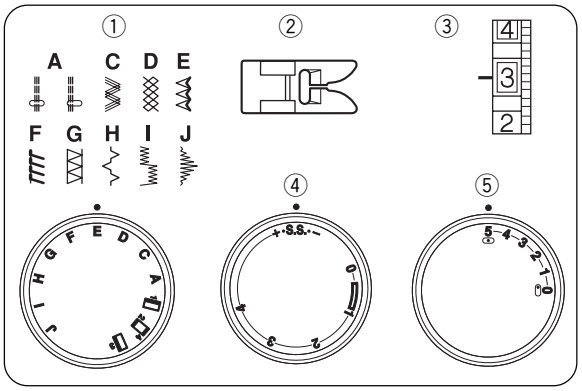

Stretch Stitch Patterns

① Pattern selector: A–J
② Presser foot: Zigzag foot
③ Thread tension: 1–4
④ Stitch length: S.S.

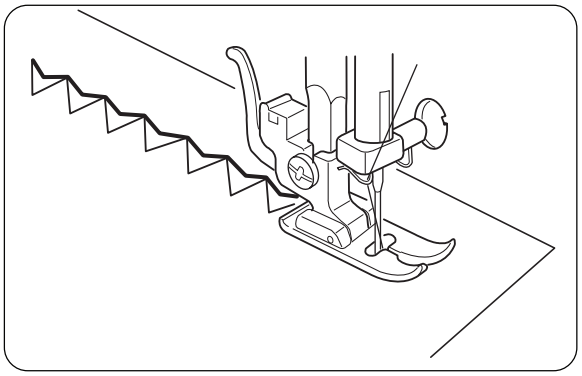

If forward and reverse feeds become unbalanced due to the type of fabric, adjust the balance by turning the stitch length dial as follows:
If patterns are compressed, turn the dial toward "+".
If patterns are drawn, turn the dial toward "–".
(See page 11)

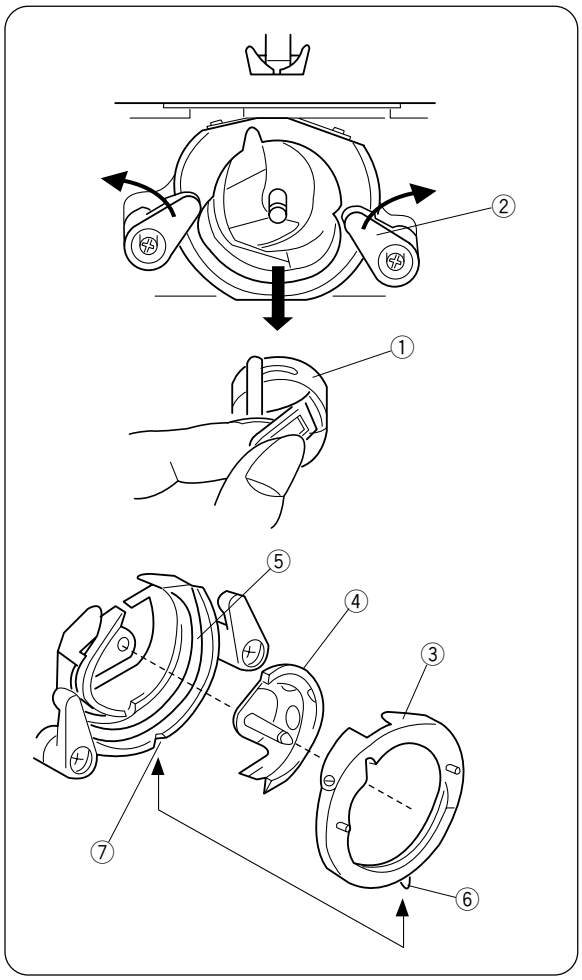

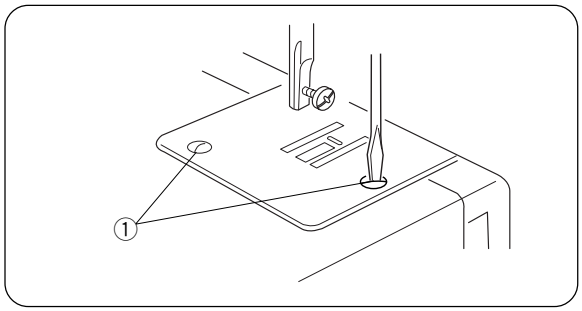

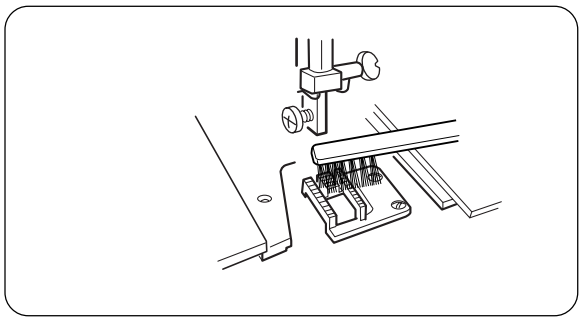

SECTION 6.
TAKING CARE OF YOUR MACHINE

Cleaning the Bobbin Case and the Hook

⚠ CAUTION:
Turn off the power switch and/or unplug the machine before dismantling the sewing machine.

To dismantle shuttle race unit:
Raise the needle to its highest position and open the hook cover.
Open the hinged latch of bobbin case and take it out of the machine.
Open the hook race ring holders and remove the shuttle race ring.
Remove the hook.

* Clean the hook race with a brush and a soft dry cloth.

① Bobbin case
② Shuttle race ring holder
③ Shuttle race ring
④ Shuttle
⑤ Shuttle race

To assemble shuttle race unit:
Hold the shuttle by the center pin and fit it carefully back into the shuttle race, forming a perfect circle with the shuttle driver.
Attach the shuttle race ring making sure the bottom pin fits into the notch.
Lock the shuttle race ring by turning the holders back into position. Insert the bobbin case.
⑥ Pin
⑦ Notch

Cleaning the Feed Dog

⚠ CAUTION:
Turn off the power switch and/or unplug the machine before cleaning the feed dog.

Remove the needle and the presser foot.
Remove the needle plate setscrew and remove the needle plate.
① Setscrew

With a brush, clean out any dust and lint clogging the feed dog teeth.
Reset the needle plate.

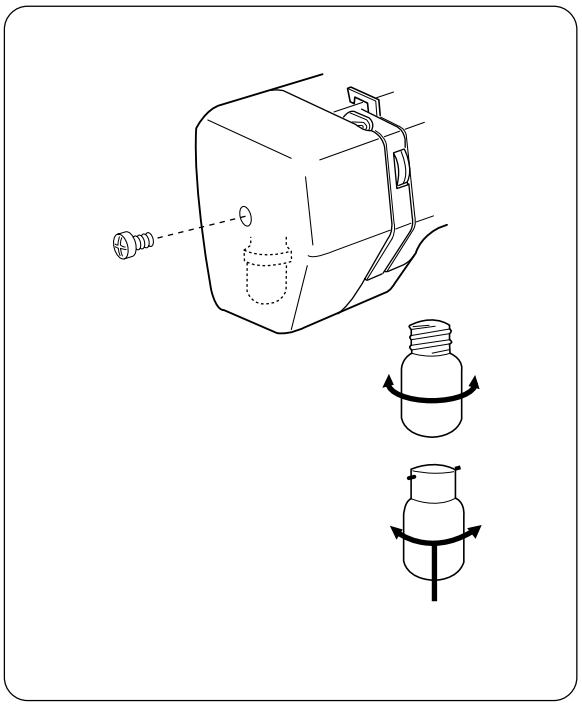

Sewing Light

The sewing light is located behind the face plate. To change the bulb, take the face plate off the sewing machine by removing the setscrew.

Unplug the power supply before changing the bulb. Do not dismantle the machine other than explained in this manual.

To remove .... Push and twist to the left.
To replace .... Push and twist to the right.

WARNING
The bulb may be HOT. Protect your fingers when handling it.

Troubleshooting

Condition	Cause	Reference
The needle thread breaks.	1. The needle thread is not threaded properly. 2. The needle thread tension is too tight. 3. The needle is bent or blunt. 4. The needle is incorrectly inserted. 5. The needle thread and the bobbin thread are not set properly under the presser foot at the beginning of sewing. 6. The fabric is not drawn to the rear when the sewing has finished. 7. The thread is too heavy or too fine for the needle.	Page 9 Page 10 Page 6 Page 6 Page 13 Page 13 Page 6
The bobbin thread breaks.	1. The bobbin thread is not threaded properly in the bobbin case and shuttle. 2. Lint has collected in the shuttle area. 3. The bobbin is damaged and doesn't turn smoothly.	Page 8 Page 25 Change the bobbin
The needle breaks.	1. The needle is incorrectly inserted. 2. The needle is bent or blunt. 3. The needle clamp screw is loose. 4. The needle thread tension is too tight. 5. The fabric is not drawn to the rear when the sewing has finished. 6. The needle is too fine for the fabric being sewn.	Page 6 Page 6 Page 6 Page 10 Page 13 Page 6
Skipped stitches	1. The needle is incorrectly inserted. 2. The needle is bent or blunt. 3. The needle and/or threads are not suitable for the work being sewn. 4. A blue tipped needle is not being used for sewing stretch, very fine fabrics and synthetics. 5. The needle thread is not threaded properly. 6. The wrong needle is being used.	Page 6 Page 6 Page 6 Page 6 Page 9 Change the needle
Seam puckering	1. The needle thread tension is too tight. 2. The needle thread is not threaded properly. 3. The needle is too heavy for the fabric being sewn. 4. The stitch length is too long for the fabric.	Page 10 Page 9 Page 6 Make stitch denser
The cloth is not feeding smoothly.	1. The feed dog is packed with lint. 2. The stitches are too fine. 3. The darning plate is attached.	Page 25 Make stitch coarser Remove the plate.
The machine doesn't work.	1. The machine is not plugged in. 2. A thread is caught in the shuttle race. 3. The clutch is disengaged.	Page 4 Page 25 Page 8
Noisy operation	1. There is thread caught in the shuttle race. 2. Lint has built up in the shuttle or the shuttle race.	Page 25 Page 25